Skill India
कौशल भारत-कुशल भारत

सत्यमेव जयते
GOVERNMENT OF INDIA
MINISTRY OF SKILL DEVELOPMENT
& ENTREPRENEURSHIP

N·S·D·C
National Skill Development Corporation
Transforming the skill landscape

INDIAN IRON & STEEL SECTOR SKILL COUNCIL

Facilitator Guide

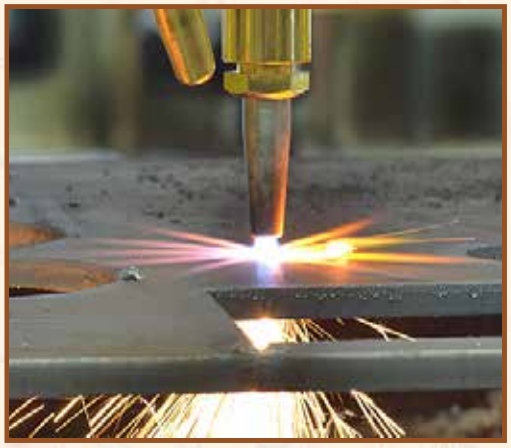

Sector
Iron & Steel

Sub-Sector
Mechanical Maintenance

Occupation
Welding

Reference ID: **ISC/Q0911, Version 1.0**
NSQF Level: **4**

Tungsten Inert Gas Welder (GTAW)

Published by

ABC Company Ltd.
7, NSDC Marg,
New Delhi - 110002
Email:
Website:

First Edition, March 2016

ISBN 978-1-111-22222-45-7

Printed in India at
XYZ Company
New Delhi – 110016

Sector Skill Council Contact Details:
Address: Royal Exchange, 6 N.S. Road, Kolkata - 700 001
Email: info.iisssc@gmail.com
Phone: +91 9831083024

Disclaimer

"Skilling is building a better India. If we have to move India towards development then Skill Development should be our mission."

Shri Narendra Modi
Prime Minister of India

Skill India
कौशल भारत-कुशल भारत

N·S·D·C
National Skill Development Corporation
Transforming the skill landscape

Certificate

COMPLIANCE TO
QUALIFICATION PACK – NATIONAL OCCUPATIONAL STANDARDS

is hereby issued by the

Indian Iron & Steel Sector Skill Council

for

SKILLING CONTENT : PARTICIPANT HANDBOOK

Complying to National Occupational Standards of
Job Role/ Qualification Pack: **'GTA/TIG Welder'** QP No. **'ISC/Q0911, NSQF Level 4'**

Date of Issuance: April 9th, 2016
Valid up to*: April 10th, 2018

*Valid up to the next review date of the Qualification Pack or the 'Valid up to' date mentioned above (whichever is earlier)

Authorised Signatory
Indian Iron & Steel Sector Skill Council

Acknowledgements

iiw

SIMA
Sponge Iron Manufecturars Association

QUIZAN TM
ISO-9001:2008

insdag

AISRA
ALL INDIA STEEL REROLLERS ASSOCIATION

About this book

This Facilitator Guide is designed to enable training for the specific Qualification Pack (QP). Each National Occupational (NOS) is covered across Unit/s.

This job is all about performing manual TIG welding for a range of standard welding requirements. This is for a skilled welder who can weld different materials in various positions and prepare various joints including corner, butt, fillet and tee. Set up and prepare for operations interpreting the right information from the WPS.

Key Learning Objectives for the specific NOS mark the beginning of the Unit/s for that NOS. The symbols used in this book are described below.

Symbols Used


Steps


Time


Tips


Notes


Objectives


Do

Ask


Explain


Elaborate


Field Visit


Practical


Lab


Demonstrat


Exercise


Team Activity


Facilitation Notes


Learning Outcomes


Say


Resources


Activity


Summary


Role Play


Example

Table of Contents

Skill India
कौशल भारत-कुशल भारत

सत्यमेव जयते
GOVERNMENT OF INDIA
MINISTRY OF SKILL DEVELOPMENT
& ENTREPRENEURSHIP

N·S·D·C
National Skill Development Corporation
Transforming the skill landscape

INDIAN IRON & STEEL SECTOR SKILL COUNCIL

1. Introduction

Unit 1.1 - Understanding of Iron & steel industry

Unit 1.2 - Understanding various types of Iron & Steel Industry

Unit 1.3 - Creation of products in Iron & Steel industry

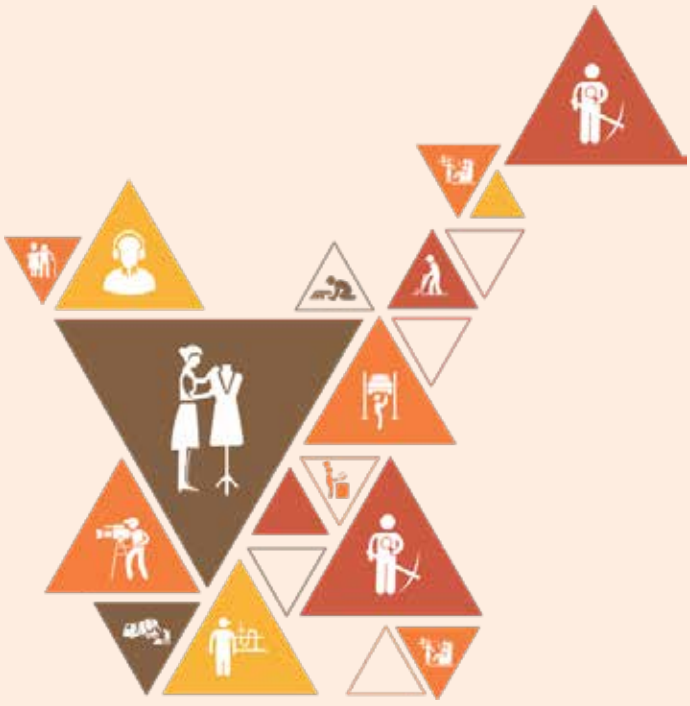

Key Learning Outcomes

At the end of this module, you will be able to:

1. Discuss about Iron & Steel industry
2. Discuss about development activities in Iron & Steel industry
3. Discuss about employment opportunities in India
4. Know about industry structure
5. Know about Iron & Steel plants in India
6. Know about steel making procedure
7. Know about processes involve in steel making

UNIT 1.1: Understanding of Iron & Steel Industry

Unit Objectives

At the end of this unit, you will be able to:

1. Discuss about Iron & Steel industry
2. Discuss about development activities in the industry
3. Know about opportunities in Iron & Steel Industry in India

Resources to be Used

- Invigilator can use the available objects such as a marker, duster, pen, notebook etc.

Do

- Take a parcel, mention some details such as student name, hobbies, likes, dislikes etc.
- Make the students stand in a circle, close enough to the person each side of them that they can
- Pass the parcel quickly.
- Say 'Stop' when the students least expect it. The person who has the parcel at that time should get out from the class.
- Those who get out should introduce themselves by providing the details mentioned in the parcel.
- The winner of the game should stand and introduce himself/herself at the end of the game.
- At last, say thank the students for their participation.

Say

- India comes under the list of world's largest crude steel producer countries.
- Crude steel capacity of India reached 109.85 Million tonnes (MT), with a growth of 7.4 per cent.
- Requirement of large amount of iron ore and coal for production of steel.
- According to the data, the Indian metallurgical industries attracted Foreign Direct Investments (FDI) of around US$ 8.7 billion.
- Indian government is aiming to increase steel production to 300 MT by 2025 in the country.

- The Ministry of Steel is facilitating setting up of an industry driven Steel Research and Technology Mission of India (SRTMI) in association with the public and private sector steel companies to spearhead research and development activities in the iron and steel industry at an initial corpus of Rs 200 crore.
- The total employment in the steel industry is more than 2 million which includes both direct and indirect employment.

Notes for Facilitation

- You could ask the students who get out during the game to be the music keepers. They can start and stop the music as the game progresses.
- Encourage shy students to provide information about themselves by prompting them with questions such as 'what do you enjoy doing the most', 'what is your favorite movie or book' etc.
- Brief about iron and steel industry.
- What all conditions for the growth in iron and steel industry.
- Explain the government initiatives in this sector.
- You could ask from the students about employment opportunities in the industry.

UNIT 1.2: Understanding various types of Iron & Steel Industry

Unit Objectives

At the end of this unit, students will be able to:

1. Discuss about Iron & Steel industry structure
2. Know about Iron & Steel plants in India

Say

- The Iron and Steel Industry in India is separated into two divisions:
  - Integrated producers, and
  - Secondary producers
- TISCO is the oldest iron and steel plant of India.
- There are more than 50 Iron and Steel industries in India.
- There capacity varying from ten thousand to five lakh tonnes, these are known as mini steel plants.

Notes for Facilitation

- You could ask the students about the expectations from the course.
- Invite students to participate.
- List the major Iron and Steel producing companies in India.
- Give the students a brief overview of what all will be covered in the program.
- You could ask the location of different industries in India.
- You could ask the iron and steel industries name in India.

UNIT 1.3: Creation of products in Iron & Steel Industry

Unit Objectives

At the end of this unit, students will be able to:

1. Discuss about steel making process
2. Know about different processes involved in steel making

Say

- Production of steel involves many process steps which can be carried out in different combinations of energy supply, product mix, available raw materials and investment.
- There are many processes involved in steel making like coke making, blast furnace, smelting, reduction etc.
- Coke is produced by heating coking coals up to 1000 to 1200 °C for several hours in coke ovens to drive off volatile compounds and moisture.
- In Basic Oxygen Furnace (BOF)-Blast furnace (BF) route: pig iron is produced by using iron ore (70-100%) and coke in a blast furnace, and then turned into steel in a basic oxygen furnace.
- Smelting reduction unit combine processes for the gasification of coal with the melted iron ore.
- Smelting reduction unit has lower energy intensity than blast furnace

Notes for Facilitation

- You could ask the students the three main steel making procedures.
- Give students some time to think about how the iron and steel industry has changed in the last five years.
- Set the context and describe the industry trends in iron and steel.
- You could ask the entire process involve in steel making.

Field Visit

- You could visit the Iron and steel producing company and demonstrate the procedure of steel making

Skill India
कौशल भारत-कुशल भारत

सत्यमेव जयते
GOVERNMENT OF INDIA
MINISTRY OF SKILL DEVELOPMENT
& ENTREPRENEURSHIP

N·S·D·C
National Skill Development Corporation
Transforming the skill landscape

INDIAN IRON & STEEL SECTOR SKILL COUNCIL

2. Occupational, Health and safety (OHAS)

Unit 2.1 - Learn Occupational health & Safety

Unit 2.2 - Hazard

Unit 2.3 - Safe working practices

Unit 2.4 - Working at Heights and confined spaces

Unit 2.5 – Fire prevention

Unit 2.6 - Emergencies, rescue and first aid procedures

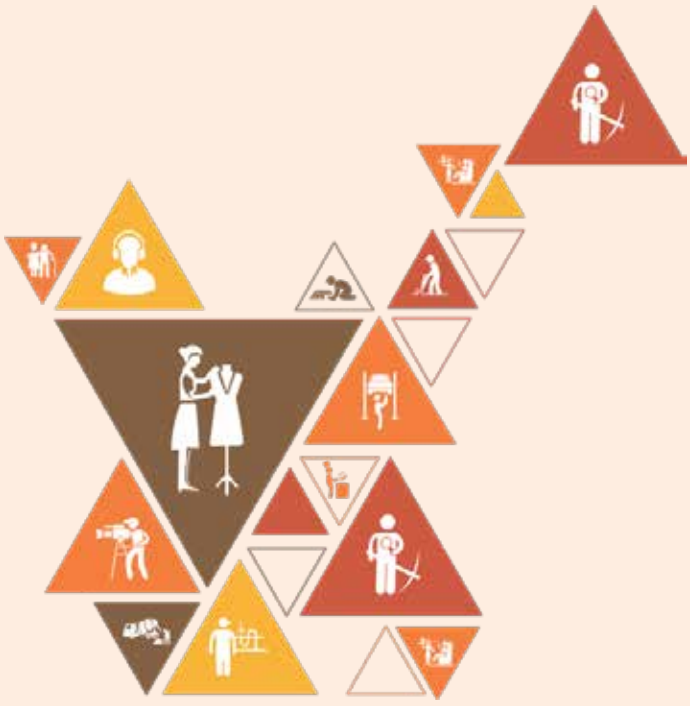

ISC/N0008

Key Learning Outcomes

At the end of this module, students will be able to:

1. Discuss about safety requirements, procedures, and resources for different areas
2. Discuss about safe work practices
3. Know about hazards, types of hazards and how to control hazards
4. Know about PPE requirements
5. Know about safe working practices at heights
6. Know about safe working practices at confined spaces
7. Discuss about protection from fire hazards
8. Know about fire extinguisher and how to use it.

UNIT 2.1: Learn Occupational Health & Safety

Unit Objectives

At the end of this unit, students will be able to:

1. Discuss about health and safety requirements in industry
2. Know about essential elements for safety
3. Know about good safety work practices

Resources to be Used

- Available objects such as a duster, pen, notebook etc.

Do

- Welcome and greet the participants. Revise the learnings of the previous sessions and ask them if they have any doubts.At last, say thank the students for their participation.

Say

- The health and safety of workers is a very important factor in this industry because it affects both social and economic factors of an organization.
- An iceberg of incidents is showing the nature of various types of accidents. They are unsafe actions, incidents, minor injuries, lost time injuries, serious accidents and fatalities.
- Three features are vital for advancement of safety in a workshop.
- Conducting regular safety audits to identify unsafe practices and areas and how to take corrective actions to overcome the issues. Safety audits can help in timely recognition of hazards and risks.

Elaborate

- Three features are vital for advancement of safety in a workshop:
  - Situation of environment of work place in terms of plant access, housekeeping, safety and safe place of work etc..
  - Workers training and ability which assists them to recognize and apply safe systems of work.

o The development of motivational and behavioral influences of employees. This includes identifying unsafe behavior and attitudes by using more direct strategies and to motivate employees.

Ask

- Ask various type of accident.
- Ask three aspects are important for progress of safety in a steel plant.
- Ask the essential elements necessary for safety
- Ask about the good safety practices

Notes for Facilitation

- You could ask what the students think about safety in steel plant.
- You could ask the benefits to adopt such technique.

UNIT 2.2: What Is Hazard

Unit Objectives

At the end of this unit, you will be able to:

1. Know about hazards and different types of hazards
2. Know about, how to identify and control hazards

Do

- Welcome and greet the participants. Revise the learnings of the previous sessions and ask them if they have any doubts.

Say

- A hazard is something that has the potential to cause injury, disease or death in a workplace.
- Aspects for the development of a safe workplace environment are development policies, consultative process, hazard identification and control.
- Hazards are of following types: Physical, Mechanical, chemical and Electrical etc.
- Mineral oil is typically used for operation purposes for bulk density control and dust suppression.
- The emissions contain numerous polycyclic aromatic hydrocarbons (PAHs), some of which are carcinogenic.
- Ensure the control measures

Elaborate

There are a number of aspects to the development of a safe workplace environment.

- The development of policies
- The development of consultative processes
- Hazard identification, assessment and control.

A welding shop is full of hazards at every step of its operation. These hazards are to be tackled for the sake of safety in the workshop.

The most common hazards, injuries and illness that welding and cutting personnel are exposed to more frequently than other workers include

- electric shock – contact with electrically live parts
- radiation burn – Body or eye burn due to the welding arc
- Thermal burns – burns due to burning or melt material or weld spatter; or due to burning of garments in oxygen enrich environment.
- Fire and blast – might be because of bend, fire, starts or splash or electrical blames in blend with flammable materials, gases or fluids.
- Eye damage – radiation and unfamiliar material can cause the injury.
- Manual handling – use recognised methods for lifting and transporting articles.
- Illness – illness may come about because of inward breath of smoke from welding, brazing, metalizing or cutting, from surface covering on the material being managed, from breakdown of contaminants, for example, lingering chemicals in drums, paint or plastic attached to metals.
- Asphyxiation (smoke/gas) – dislocation of oxygen by non-poisonous gasses can be hazardous.
- Hearing impairment – excessive noise should be avoided.
- Falls – working at heights or above openings increases risk.
- Other hazards – those typically found in general engineering or in special areas.

Fumes

Fumes are fine, hard particles, created by the subsequent universal procedure:

- Metal and flux experience fast softening joined by restricted vaporization.
- vapours are oxidized
- reaction happens between flux and other materials
- Consolidation of vapours for producing smoke.

Gases

This can created in many welding forms by different ways:

- deposition of flux on paints and solvents
- results of reaction between protecting gasses
- combustion of element in arc
- Photochemical response of climatic gasses because of bright (UV) radiation from the circular segment or fire.

The electrode covering is a perplexing blend of different parts, for example:

- moulding specialists (like magnesium silicate)
- binders (like potassium silicates)
- intensification specialists (like mica)
- slag generators (like carbonates and fluorides)

- metal powders to raise deposition speed
- Flux experts (like fluorspar and sodium silicate).

Ways for enter into body

There are many ways gases and fumes can enter the body, including:

- inhalation
- ingestion
- skin.

Ask

- You can ask the different types of hazard
- You can pick the students and ask the hazard warning sign.
- You can ask the different ideas to control the hazard.
- You could ask the most common hazard in welding shop.

Notes for Facilitation

- You could ask the hazard during workplace.
- You could show all the hazard warning sign and their differences.
- You could ask the various techniques to avoid and control from hazards.
- Give students some time to think about how the hazard affects physical and mentally to our body

Activity

- Conduct a skill practice activity.
- Ask the students to assemble together.
- Explain the purpose and duration of the activity.
- Set guidelines pertaining to discipline and expected tasks.

Skill Practice	Time	Resources
Identification of Hazards sign	20 min	Hazard sign

Do

- Ask them to get into pairs for practice.
- Go around and make sure they are doing it properly.
- Wrap the unit up after summarizing the key points and answering questions.

UNIT 2.3: Safe Working Practices

Unit Objectives

At the end of this unit, you will be able to:

1. Know about safe working practices
2. Know about personal protective equipments
3. Know about MSDS

Resources to be Used

- Available objects such as a duster, pen, notebook, PPE, heavy weight etc.

Do

- Welcome and greet the participants. Revise the learnings of the previous sessions and ask them if they have any doubts.

Say

- There are safe practices need to be consider for avoiding general shop hazards
- There are safe practices need to be consider for avoiding machine hazards
- Every worker has to lift and move heavy weight during the job whenever required.
- Extreme care should be taken while lifting or moving the job so that no damage occurs to the job or plant and also to prevent accidents at work place.
- A MSDS provides detailed information on a hazardous substance. It gives more details than a label.
- It is important that hazardous substances in workplaces are used according to the manufacturer or supplier's written instructions (the MSDS) and agreed safe work procedures

Elaborate

Personal protective equipment provides us the last level for controlling hazards. Before using of personal protective equipment, the working requirements of the equipment should be checked to make sure it fulfills the same, verify the required standards, make sure it fits the body shape of the user, be user-friendly and is under regular maintenance and can be switched if required.

Personal Protective Equipment (PPE)

- **Safety helmet**: Safety helmets guard the head from injuries caused by falling objects.
- **Earmuffs, earplugs**: Earmuffs and earplugs protect the ears from injuries by loud noises.
- **Safety belt**: Safety harnesses guard from falling from heights.
- **Goggles**: Goggles protect the eyes from injuries caused by strong light or flying objects.
- **Safety boots**: Safety boots guard the feet from puncture wounds, injuries and slipping.
- **Respirator**: Respirators guard the respiratory system from the attack of poisonous gases, mist, fumes and dust.

Fig 2.3.1: *PPE*

MSDS

FUMES		
Substance	**How formed**	**Potential health issues**
Cadmium	Welding or cutting of metal layered with cadmium	Severe annoyance of the respiratory passages, deferred pulmonary oedema; lung and kidney damage
Chromium	utilization of chrome-plated, or stainless steels or of solid -facing and chrome alloy electrodes	Various type of chromium have been observed to be carcinogenic; other types are biologically static
Cobalt	Welding or cutting of certain alloys	Succinctness of breath
Fluorides	Certain fluxes contain fluoride and would be able to ascend to dust, smoke and vapour	Fluoride exhaust may cause bothering of eyes, throat, respiratory tract and skin; long haul presentation would lead to bone solidifying
Iron	Welding or cutting of ferrous materials	Siderosis (transitory)
Lead	Welding or cutting of metal covered with lead or toxic paints	Central nervous system & gastro-intestinal
Manganese	Utilization of manganese-containing electrode centres, coatings or wire; welding of manganese steel	Metal seethe fever, nervous system
Molybdenum	Welding or cutting of molybdenum-containing alloys	Bronchial disturbance, liver and kidney changes
Nickel	Welding and cutting of nickel-plated and stainless steels	Irritation of respiratory tract; possibly cancer-causing
Silica(and silicates)	Certain fluxes or soil adulteration could cause silica fume discharges	Silica fume from welding operations is shapeless and not viewed as destructive
Vanadium	Utilization of certain filler wires and exceptional alloy steels	Eye and respiratory tract disturbance; chemical pneumonia
Zinc	Welding or cutting of galvanised steel	Metal fume fever (transient)
Other metals	Welding may create fumes of different metals, for example, aluminium, copper, magnesium, tin, titanium and tungsten	No known genuine wellbeing issue are known to be expected due to presentation to these exhaust

GASES		
Substance	**How formed**	**Some potential health consequences**
Oxides of nitrogen	Produced by the straight combination of oxygen and nitrogen in the air neighboring the arc or flame	Not an issue in open-air or open shop welding; in cramped spaces can rise up to level that can lead to respiratory irritation or delayed pulmonary oedema
Ozone	Shaped by certain welding operations, especially when high amperages are included, by the activity of ultraviolet radiation on oxygen noticeable all around	Very aggravation to the upper respiratory tract and lungs (impact might be postponed)
Carbon Monoxide	Lessening of carbon dioxide protecting gas and to some degree in all welding operations because of diminishment of consumables or incomplete combustion of acetylene	Can cause sleepiness, cerebral pains and queasiness; unconsciousness and demise as a result of extraordinary cases
Carbon dioxide	Protecting gas or ignition item	Can be a suffocate (excludes oxygen))
Phosgene	Framed by the oxidation of chlorinated hydrocarbons (trichloroethylene, and so on.) in the air or on the weldments	Irritation to the respiratory tract (and lung harm) after an idle time of a few hours
Phosphine	Framed when welding steel covered with rust proofing compound	Irritating to the eyes, nose and skin; may likewise cause genuine impacts on lungs and different organs
Lack of oxygen	Inactive gasses (argon, helium, and so on.) excludes oxygen from bound spaces (as would carbon dioxide)	Can cause suffocation
Pyrolysis products	Shaped by the warm deterioration of the resins in primers and paints - could incorporate phenol, formaldehyde, acrolein, isocyanates and hydrogen cyanide	Can cause a wide range of health impacts

Sample Exposure Standards		
Compound	TWA (8 hour average)	Short term exposure limit (15 min)
Carbon dioxide (CO2)	5,000 ppm	30,000 ppm
Carbon monoxide (CO)	30 ppm	-

Chromium (Cr)	0.5 mg/m³	none specified
Copper (Cu)	0.2 mg/m³	none specified
Fluorides	2.5 ppm	none specified
Nickel (Ni)	1.0 mg/m³	none specified
Nitrogen dioxide	3 ppm	5 ppm
Ozone	0.1 ppm	peak limitation
Total welding fume	5 mg/m³	none specified

Remember:

- follow safe work procedures
- always correctly wear the appropriate PPE provided by your employer
- do not eat, drink or smoke while working with a hazardous substance
- do not keep food or drink near the substance
- wash your hands and face and other exposed areas with soap and water before going to the toilet or eating and drinking
- read the MSDS.

Ask

- You can pick the students and ask the safe practices for avoiding general shop hazards.
- You can ask the various types of personal protective equipment.

Notes for Facilitation

- You could ask the safety checklist before operating a machine.
- You could show the protective equipment and ask the causes.
- You could ask the causes of wrong handling

Do

- Show them the PPE
- Demonstrate the use and requirement of PPE
- Demonstrate the safe material handling practices

Demonstrate

Points to be taken care of while lifting / moving material

- Lift the materials in correct posture.
- Do not try to lift too heavy materials alone.
- Ensure the grip is right so that the job doesn't slip from hand and fall
- Put down the job at the destined place properly.
- Do not throw the job on ground.
- Avoid double handling.
- Take rest breaks during heavy or repetitive work.

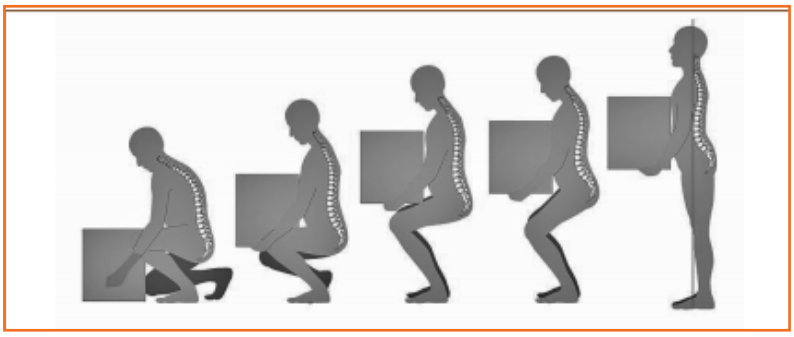

Fig 2.3.2: *Safe material lifting*

Activity

- Conduct a skill practice activity.
- Ask the students to assemble together.
- Explain the purpose and duration of the activity.
- Set guidelines pertaining to discipline and expected tasks.

Skill Practice	Time	Resources
PPE and Safe material handling	2 hours	PPE
		Heavy weight

Do

- Ask them to get into pairs for practice.
- Go around and make sure they are doing it properly.
- Wrap the unit up after summarizing the key points and answering questions.

Lab

- You could show the various personal protective equipments (PPE) to the students in the lab

UNIT 2.4: Working at heights and confined spaces

Unit Objectives

At the end of this unit, you will be able to:

1. Discuss about risks of working at heights
2. Know about safety precautions while working at heights
3. Discuss about risks of working at confined spaces
4. Know about safety precautions while working at confined spaces

Resources to be Used

- Available objects such as a duster, pen, notebook, ladder, respiratory equipments etc.

Do

- Welcome and greet the participants. Revise the learnings of the previous sessions and ask them if they have any doubts.

Notes for Facilitation

- You could ask the students about the understanding of safe working practices at heights and confined spaces.
- Invite students to participate. List the responses from students on the whiteboard.
- Give the students a brief overview of what all will be covered in the program.

2.4.1: Safe working at heights

Say

- Falls from height are responsible for many serious and fatal injuries every year.
- The Health and Safety Executive recommends a five-step approach to risk assessment, and the risk of slips, trips and falls should also be considered.

Elaborate

The main hazards associated with working at height are people falling and objects falling onto people below. These may occur as a result of inadequate edge protection, or from objects in storage being poorly secured.

Safety equipments can use while working at heights:

- Mobile elevated platforms
- Ladders
- Step-ladders
- Scaffolder
- Harnessing belts

Do

- Show the risk assessment procedure
  1. Look for hazards associated with falls from height around the workplace. Where are people required to work at height? Do they carry out work from ladders, platforms, scaffolds, or unprotected or fragile roofs?
  2. Decide who might be harmed and how. Who comes into the workplace? Are they at risk? Are some groups more at risk than others?
  3. Consider the risks. Are there already measures in place to deal with the risks? Look at areas with unguarded openings or without guardrails and covers. Are regular inspections carried out?
  4. Record your findings if you have five or more employees.
  5. Regularly review the assessment. If any significant changes take place, make sure that precautions are still adequate to deal with the risks.
- Demonstrate the safe use of ladders

Demonstrate

Steps of how to work safely on ladder:

1. Climb only the front of the ladder, never the back.
2. Don't climb higher than the tread that's third from the top (there should two steps above you, including the top); never sit on the top.
3. Keep your hips centered between the vertical side rails; don't overreach to either side.
4. Never stand on the spreaders or paint shelf.
5. Don't leave ladders unattended, especially around children.
6. Allow only one person on the ladder at a time.
7. Never lean a closed stepladder against a wall and climb it; it can slide out from under you.

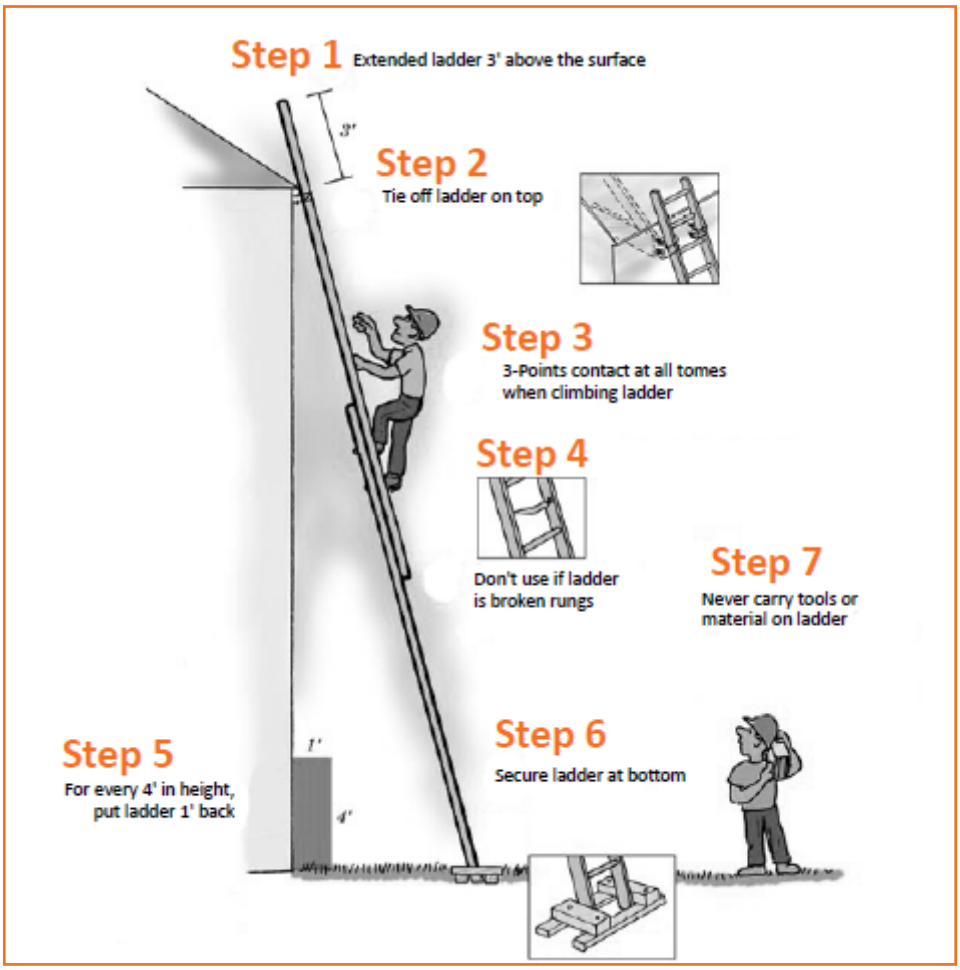

Fig 2.4.1: *Safe use of ladder*

Do's

- Work on ground level, as much as possible.
- Make sure equipment is sufficiently stable, appropriate and strong for the job.

- When working on or near delicate areas, take safeguards
- Always be prepared for protection from falling objects
- make strategy for evacuation in case of emergency and rescue procedures

Don't

- Overload ladders
- Overreach on ladders or stepladders
- Fix the ladder on weak and uneven surfaces
- Use stepladders or ladders for tough or heavy tasks.

Ask

- You could ask the safe working procedure while working at height.

2.4.2: Safe working at confined spaces

Say

- Spaces which are enclosed from all around and risk of death or serious injury from dangerous conditions and hazardous substances is very high, are known as confined spaces.
- If you cannot avoid entry into a confined space, make sure you have a safe system for working inside the space.

Elaborate

Dangers can arise in confined spaces because of the following issues.

- A lack of oxygen. This can occur:
  - Spaces where reaction between some soils type and oxygen happens in the atmosphere;
  - Reaction of groundwater with limestone produces carbon dioxide;
  - Rust formation inside the vessels and steel tanks.
- Poisonous gas, fume:
  - Formation of poisonous gases in sewers and manholes;
  - Leakage of gases and fumes into trenches and pits in a poisonous area.
  - enter tanks or vessels from connecting pipes;
- Liquids and solids which can suddenly fill the space, or release gases into it, when disturbed. Free-flowing solids such as grain can also partially solidify or 'bridge' in silos, causing blockages which can collapse unexpectedly.
- Fire and explosions due to excess oxygen and flammable vapours.
- Filling of liquids and solids inside the space, when disturbed.
- Hot temperature conditions leading to increase in body temperature dangerously.
- Residues of fumes and vapour left in tanks, vessels etc.
- High concentrations of dust e.g. in flour silos.

Safe systems of work at confined spaces

If you have to work in a confined space, carry safety systems and equipments for working inside the space. The following checklist is important while working in a confined space.

- **Isolation**: Isolate the electrical and mechanical system of equipments need to be operating in space. In any cases, ensure that isolation done is effective.

- **Cleaning**: Make sure that there is no formation of fumes from residues during the work.
- **Size of entrance**: Entrance size is big enough to permit workers to enter in the space with all the necessary equipment required, and provide ready exit during an emergency.
- **Provision of ventilation**: Ensure that there is proper mechanical ventilation for an adequate supply of fresh air in the confined space. It is very important where portable gas cylinders and diesel fuelled equipment are used.
- **Isolation**: Mechanical and electrical isolation of equipment is essential if it could otherwise operate, or be operated, inadvertently. If gas, fume or vapour could enter the confined space, you need to isolate the pipework. In all cases, a check should be made to ensure isolation is effective.
- **Cleaning**: before entry this may be necessary to ensure fumes do not develop from residues etc while the work is done.
- **Check the size of the entrance**: Is it big enough to allow workers wearing all the necessary equipment to climb in and out easily, and provide ready access and exit in an emergency? For example, the size of the opening may mean choosing air-line breathing apparatus in place of self-contained equipment which is more bulky and therefore likely to restrict ready passage.
- **Provision of ventilation**: You may be able to increase the number of openings and therefore improve ventilation. Mechanical ventilation may be needed to make sure there is an adequate supply of fresh air. This is essential where portable gas cylinders and diesel fuelled equipment are used inside the space because of the dangers from build-up of engine exhaust.
- **Provision of special tools and lighting**: Use non-sparking tools and protected lighting systems to avoid flammable and explosive atmospheres. In confined space like inside metal tanks, appropriate precautions are required for safety from electric shock.
- **Provision of breathing apparatus**: Availability of breathing apparatus, if the air inside the space is not adequate and suitable for breathing because of poisonous fumes, gases or vapours in the space and lack of oxygen.
- **Preparation of emergency arrangements**: Proper emergency arrangements which cover the necessary equipments and practice drills.
- **Provision of rescue harnesses**: Availability of safety harnesses at the point outside the confined space.
- **Emergency procedures**: When situations are not favorable, there can be chance of serious and immediate danger. Effective arrangements like alarm systems and rescue operations during an emergency are essential.

Notes for Facilitation

- You could ask about essential elements to help prepare a safe system of work at confined spaces.
- Show them the safety equipments required while working at confined spaces.

Ask

- You could ask the confined space at safe working.
- You could ask how the danger can arise in confined space.
- What can occur if there is lack of oxygen?
- You could ask the isolation process.
- You could ask the safe systems of work at confined spaces.

UNIT 2.5: Fire Prevention

Unit Objectives

At the end of this unit, you will be able to:

1. Discuss about fire hazards and how to control
2. Discuss about fire extinguishers
3. Know about types of fire extinguishers
4. Know about how to use fire extinguishers

Resources to be Used

- Available objects such as a duster, pen, notebook, fire extinguisher, fire alarm, PPE etc.

Do

- Welcome and greet the participants. Revise the learnings of the previous sessions and ask them if they have any doubts.

Say

- Fire is defined as a self-sustaining combustion process in which a substance (fuel) combines with oxygen in air to produce immense heat and light.
- Fire hazards pose threats to life and property.
- Fire is categorized into class A, B and C fire.
- A fire extinguisher is a fire protection device used to extinguish or control small fires during fire emergency situations.
- Dry chemical is a powder based. They stops and halts the production of fire supporting by “free-radicals”, accordingly extinguish the fire.

Elaborate

Different fuels create different fires and require different types of fire extinguishing agents.

Class A

Class A fires are fires in ordinary combustibles such as wood, paper, cloth, trash, and Plastics.

Class B

Class B fires are fires in flammable liquids such as gasoline, petroleum oil and paint. Class B fires also include flammable gases such as propane and butane. Class B fires do not include fires involving cooking oils and grease.

Class C

Class C fires are fires involving energized electrical equipment such as motors, transformers, and appliances. Remove the power and the Class C fire becomes one of the other classes of fire.

Class D

Class D fires are fires in combustible metals such as potassium, sodium, aluminum and magnesium.

Common fire extinguishers are:

- **Dry chemical**: These types of fire extinguisher are in powder form. They stops and halts the production of fire supporting by “free-radicals”, accordingly extinguish the fire.
- **Foams**: This type is applied over aspirated or non-aspirated fuels. It forms a seal or foamy blanket over the fuel and stops oxygen to reach near the fuel. Unlike powder type, foam type fire extinguisher is used to extinguish fires without flashback.

Fig 2.5.1: *Fire extinguisher*

- **Water**: It cools burning material by absorbing heat through the use of air pressurized water. It is successful to extinguish class A fires. Unlike dry chemicals and foams based fire extinguisher it is harmless, inexpensive and easy to clean.
- **Clean agents and carbon dioxide**: These types of extinguisher displace oxygen, control chemical chain reaction and remove heat from fire zone. This extinguisher does not leave any remains after release which is ideal for electronics items and sensitive documents.

Do

- Tell them about the fire fighting equipments.
- Show them the equipments and explain their use.
- Demonstrate them the use of fire extinguisher.
- Explain them about different types of fire extinguishers.

Demonstrate

Steps for using the fire extinguisher

Step 1: **Pull the pin** from the top of the extinguisher for releasing locking mechanism which discharges the extinguisher.

Step 2: **Aim the extinguisher towards** the base of the fire not the flame.

Step 3: **Squeeze the lever slowly.** Deliver the extinguishing agent in the extinguisher. When the lever of extinguisher is released, the discharge of extinguishing agent stops.

Step 4: **Sweep from side to side.** Move the fire extinguisher to and fro by sweeping motion until the fire is under control. Operate the extinguisher from a safe distance. Move towards the fire when it starts to reduce.

Fig 2.5.2: *Using fire extinguisher*

Notes for Facilitation

- You could ask the common fire extinguisher.
- You could ask the type of fire extinguisher and their role?
- You could ask what all information contains fire drill report.

Tips - During fire outbreak

1. On noticing a fire, immediately start shouting “fire” at top of your voice. Do not wait for the automatic fire alarms to start ringing.
2. Take a fire extinguisher
3. Use extinguisher as per fire type: - Water and co2 fire extinguishers for general fires - Foam type extinguishers for oil fires - Co2 fire extinguisher only for electrical fires.
4. Switch off all main switches during an electrical fire.
5. Do not try to switch off electrical equipment. Cut the power from the main source.
6. do not panic and alert the building fire department
7. Call the fire brigade immediately.
8. Ensure that the water sprinklers and other fire-fighting equipment have started operating.
9. First priority should be to save people. Help others to safely get out of the floor
10. Alert the nearest hospital to prepare to treat serious burn injuries.

Activity

- Conduct a skill practice activity.
- Ask the students to assemble together.
- Explain the purpose and duration of the activity.
- Set guidelines pertaining to discipline and expected tasks.

Skill Practice	Time	Resources
Use of fire extinguisher	2 hours	Fire extinguisher
		PPE

Do

- Ask them to get into pairs for practice.
- Go around and make sure they are doing it properly.
- Wrap the unit up after summarizing the key points and answering questions.

Field Visit

- You could visit any of the industry and show the firefighting equipment. With the help of field visit you could show the where we need to fit various firefighting equipment and its role.

UNIT 2.6: Emergencies, rescue and first aid procedures

Unit Objectives

At the end of this unit, you will be able to:

1. Discuss about basic first aid techniques during electric shock, burns and choking
2. Know about CPR process
3. Know about bandaging process

Say

- If you think someone is suffering from electric shock, approach with extreme caution.

Demonstrate

You can make a group of few students to do demonstrate:

Steps - How to free a person from electrocution

If find someone is suffering from electric shock, approach with extreme caution and following first aid steps.

Step 1: **Firstly take** the suffered person away from the electricity source as fast as possible. Turning off the electric supply of machine is the best method for doing this.

Step 2: If this seems impossible, remove the person from electricity source by using a piece of wood or insulating material.

Step 3: **Don't touch the victim getting the electric shock** because you could also get shock too.

Step 4: **After successful executing the victim from the electricity source**, call the ambulance, if victim is unconscious. Give first-aid to victim till the time ambulance is coming.

Step 5: **If victim is conscious** and looking well, monitor its condition, as the results of shock must not be clear immediately.

Fig 2.6.1: *Freeing a person from electrocution*

Bleeding and Wounds

Step 1: Cover the wound by a clean cloth and gloved hand; then apply firm and steady pressure on wound for 5 mins at least.

Step 2: Lift up the injured leg or arm above the victim's heart level.

Step 3: Secure the wound by a bandage when bleeding stops. Ensure that bandage is not fixed too tightly—it may stops blood circulation.

Step 4: Check the victim for shock.

Burns

Chemical or Compressed Gas Burns

Step 1: Use a drench hose and emergency shower for at least 15 mins to rinse away all residues of chemicals.

Step 2: Cover the burn by a clean and dry cloth or special dressing for burns.

Heat or Electrical Burns

Step 1: Cool burning of skin by water.

Step 2: Place the burned area under cold running water if the skin is not broken and gently compress the wound by hand. Bandage the wound by a dry and clean cloth.

Step 3: If blister appear, don't try to break it.

Step 4: Do not apply ointments or creams.

Step 5: If skin is cracked, or if injuries are severe:

- Do not clean the wound or remove embedded clothing.
- Cover the injury insecurely with a clean, dry cloth.
- Expect shock and treat accordingly.

Choking

Step 1: Wrap your arms around the stomach and stand directly behind the victim.

Step 2: Just above the navel and well below the ribs, make a fist by a hand. Place that fist with the thumb and forefinger side toward you.

Step 3: Hold the fist by other hand and pull it rapidly towards you by a slightly upward and inward thrust. If required, repeat it.

Basic techniques of banding

The key points when applying a bandage are:

Step 1: Make sure the person is comfortable.

Step 2: Never lean across their body and ensure that you are working from the side of the injury.

Step 3: First clean the wound and apply the antibacterial cream over it.

Step 4: When the bandage is on always remember keep the injured part of the body supported in the position it will be in.

Step 5: Always use right size of bandage.

Step 6: To check the passage easily, don't cover fingers or toes when bandaging a limb.

Step 7: Never wrap the bandage tight, and secure the end by folding it over and binding a knot in the end. Safety pin, adhesive tape, or a bandage clip can be used.

Artificial respiration and the CPR Process

Step 1: Check the Victim - tap and shout to get response.

Step 2: Circulation - pump the chest 30 times.

Step 3: At the center of the chest put the heel of one hand and your other hand on top of it. At a rate of 100 per minute (16 compressions in 10 seconds), press chest down 2 inches.

Step 4: Tilt head back, lift chin up to open airway - Airway.

Step 5: Breathing - Tweak nose closed, take a normal breath, cover patient mouth with yours and blow out your breath until you see the chest rise. Make one breath per 1 second. Again open airway again if chest doesn't rise.

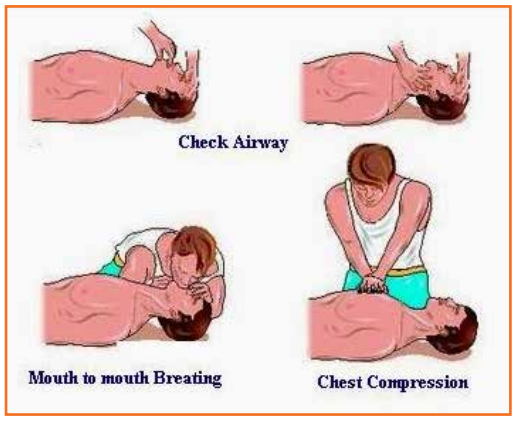

Fig 2.6.2: *CPR Process*

Step 6: Repeat procedure until help arrives or the victim begins breathing.

Correct method to move injured people during an emergency

Step 1: Stand on either side of the conscious victim. Grab the victim's wrist with the hand closest to the victim's feet on your side.

Step 2: Use your other hand to grasp the clothing on the shoulder nearest to you and pull the victim's arms to help them to a sitting position.

Step 3: Assist the victim to his or her feet and place the arms around your shoulders, if possible.

Step 4: Place your free hand around the person's waist and let him or her set the pace on hobbling out.

Step.5: Help the victim for moving slowly.

Do

- Shock can be life threatening. Symptoms include cold sweat, weakness, irregular breathing, chills, pale or bluish lips and fingernails, rapid weak pulse and nausea.

SHOCK	Do's	Don't
Shock	Take a rest	Do not give the victim anything to eat or drink
Shock	Lay the victim on his/her back	Do not move him/her.
Shock	Keep the victim warm by using the blanket or clothes.	Do not keep the victim hot.
Shock	If the victim not in pain, raise their feet and legs with a pillow.	If victim in pain do not move.

Notes for Facilitation

- You could ask the steps to free a person from electrocution.
- You could ask the steps of bleeding and wounds
- You could ask the steps of burn
- You could ask the steps of choking
- You could ask the steps of banding
- You could ask the steps of CPR

Activity

- Conduct a skill practice activity.
- Ask the students to assemble together.
- Explain the purpose and duration of the activity.
- Set guidelines pertaining to discipline and expected tasks.

Skill Practice	Time	Resources
First aid practices	3 hours	Mannequin
		First aid box

Do

- Ask them to get into pairs for practice.
- Go around and make sure they are doing it properly.
- Wrap the unit up after summarizing the key points and answering questions.

Skill India
कौशल भारत-कुशल भारत

सत्यमेव जयते
GOVERNMENT OF INDIA
MINISTRY OF SKILL DEVELOPMENT
& ENTREPRENEURSHIP

N·S·D·C
National
Skill Development
Corporation
Transforming the skill landscape

INDIAN IRON & STEEL SECTOR SKILL COUNCIL

3. 5S & House Keeping

Unit 3.1 – Identification of bottlenecks in functioning of work place

Unit 3.2 - Various methods of housekeeping

Unit 3.3 – Waste management

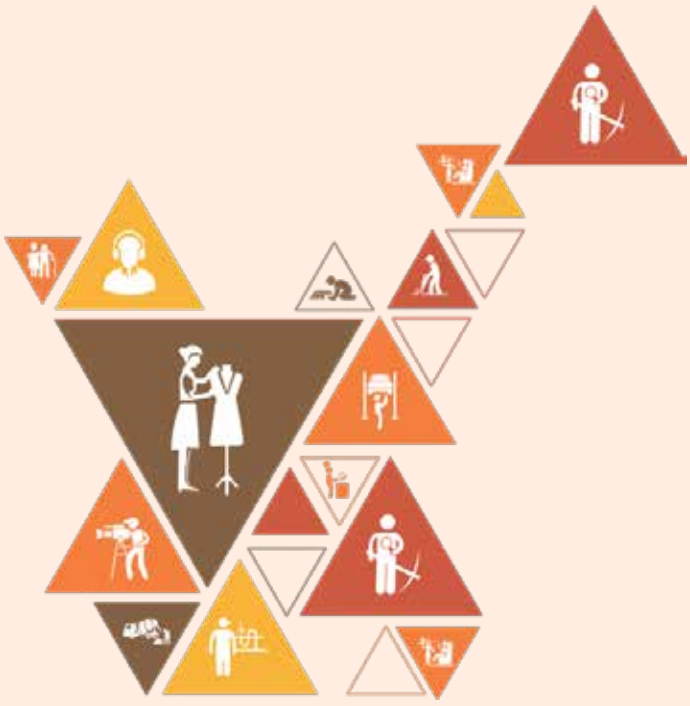

ISC/N0008

Key Learning Outcomes

At the end of this module, students will be able to:

1. Discuss about safety issues at workplace
2. Know about 5S safety management system
3. Discuss about housekeeping practices
4. Know about benefits of housekeeping
5. Know about elements of effective housekeeping
6. Know about waste management practices

UNIT 3.1: Identification of bottlenecks in functioning of work place

Unit Objectives

At the end of this unit, you will be able to:

1. Discuss about safety issues in the industry
2. Know about housekeeping issues in the industry

Resources to be Used

- Available objects such as a duster, pen, notebook etc.

Do

- Welcome and greet the participants. Revise the learnings of the previous sessions and ask them if they have any doubts.

Say

- Manufacturing facilities are riddled with risks, both hidden and out in the open. Hazards can result in serious injury or death, if don't know where to begin looking.
- Few of the biggest safety concerns in any manufacturing setting like hearing protection, eye hazards, chemical exposures, mechanical hazards etc
- The Occupational Safety & Health Administration requires companies to provide hearing guard when noise levels surpass specific levels.
- 61 percent of eye damages occur in the manufacturing, construction industries and trade a report by the Vision Council reports.
- In manufacturing, heat and flame can produce by the tools and equipment, which cumulative the risk for fires.
- During the manufacturing process, at many points dust and fumes are generated. Dense fumes released during the use of oxygen can cause lung diseases.

Elaborate

Safety concerns in any manufacturing setting are:

- **Hearing Protection:** Hearing can be affect by noise is produce by Industrial machines if you are uncovered to the noise on a long basis.
- **Eye Hazards:** 61 percent of eye damages occur in the manufacturing, construction industries and trade a report by the Vision Council reports. Eyes may be injured by dust, metal, concrete and other particles throw by machines. Eyes can burn or irritate by chemical fumes and splashes.
- **Chemical Exposure:** Some employees in manufacturing units work with hazardous chemicals like workers who produce batteries may be exposed to lead in the form of dust or fumes. This can harm nervous, urinary systems and reproductive with lead exposure linked to failures, seizures, coma and death.

Fig 3.1.1: *Chemicals*

- **Mechanical Hazards:** There are several risks to employees while working with manufacturing machines. Machines that have sprockets, gears, pulleys and rotating shafts pose risks of predicament.
- **Fire Hazards:** In manufacturing, heat and flame can produce by the tools and equipment, which cumulative the risk for fires. Employees should aware of where to find fire extinguishers and how to rescue the facility immediately in the event of a serious fire.

Fig 3.1.2: *Mechanical hazard*

- **Carbon monoxide poisoning:** In manufacturing industries, blast furnaces and converters generate huge amount of gases. Once dust has been removed, these gases are used as fuel resources and some are use as raw materials and supplied to chemical plants.
- **Dust and fumes:** During the manufacturing process, at many points dust and fumes are generated. Dense fumes released during the use of oxygen can cause lung diseases. Contact with silica is also a danger for the workers and cause serious infections and injuries.

Fig 3.1.3: *Dust and fumes*

Notes for Facilitation

- You could ask the students safety concern in manufacturing plant.
- Invite students to participate.
- You could ask the students how carbon monoxide poisoning released.
- You could ask the students effects of chemical exposure.

UNIT 3.2: Various methods of Housekeeping

Unit Objectives

At the end of this unit, students will be able to:

1. Know about 5S Safety system
2. Discuss about essential elements of housekeeping
3. Know about good housekeeping practices

Say

- 5S is a fundamental, systematic, basic, approach for quality, productivity and safety improvement.
- 5S is created by a list of five Japanese words: seiri, seiton, seiso, seiketsu, and shitsuke.
- Workplaces hazards can be eliminate by effective housekeeping and complete a job safely and properly.
- Poor housekeeping and hiding hazards can cause frequent accidents which can cause injuries.
- Elements of an effective housekeeping program are Dust and Dirt removal, clean surfaces, Maintain light fixtures, aisles and stairways, spills control, waste disposal, storage etc.

Elaborate

5S is created by a list of five Japanese words: seiri, seiton, seiso, seiketsu, and shitsuke. 5S system is implemented for organizing the workplace for increasing effectiveness and efficiency by maintaining the area and items, storing the items used, and sustaining the new practices.

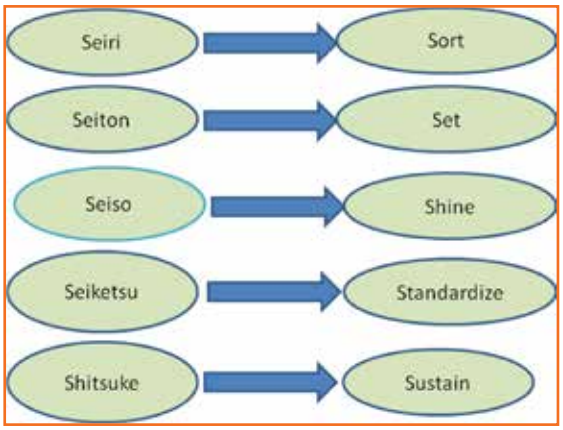

Fig 3.2.1: *5 S terminology*

Purposes of conducting regular 5S audits are:

- Evaluation of 5S standards for industry
- To fix what is wrong! - note and address non-compliance
- Give a official chance to suggest improvements

The basic steps of 5S audit are:

- Plan for the audit. Divide the workplace into several areas for successful audit reviews.

- Based on the standards set during audit, make a list for every area.

Three key tasks has to be done during the audit

1. Find out whether known difficulties have been addressed:
   - Lubricants are still leak from this machine?
   - People are not walking under crane, is the warning sign in place?
   - Why outdated drill press is still in the workshop?
2. Look into the standards is being met:
   - Are tools left on work tables?
   - From the tool rack is something missing?
   - Is dirt collecting anywhere?
   - Are safety labels visible and readable?
3. To be noted that what has not yet been standardized – Most imaginative and hard section, it may include seeing what is missing in an area that seems neat:
   - Why is there no sign over the well-ordered stack of work-in-process materials on that shelf?
   - Tools that are not yet labeled

Housekeeping

Cleanliness doesn't mean housekeeping. Housekeeping includes keeping work areas tidy and arranged; keep floors free of slip and trip accidents; clearing of waste materials (paper, cardboard) and other fire hazards.

Efficient housekeeping results in:

- Decrease handling to comfort the materials flow
- Fewer slipping and tripping accidents
- Less fire hazards
- Hazardous substances e.g. dusts, vapors exposures to lower worker
- Better control of tools and materials in managing inventory and supplies
- Equipment's are more cleaned and well maintained.
- Better hygienic conditions for good health
- Space utilization is more efficient
- Reduced property damage due to improvement in preventive maintenance
- Improved efficiency because it is easy to find tools and materials.

Ask

- You could ask the objectives and advantages of 5S
- You could ask the benefits of good housekeeping practices.
- You could ask the elements of an effective housekeeping program

Notes for Facilitation

- Invite students to participate.
- You could ask about the standards that were set during 5S for make a checklist
- You could ask how housekeeping program make effective.

Activity

- Conduct a skill practice activity.
- Ask the students to assemble together.
- Do the 5S audit of your training center and make the 5S Audit form and fill it.

Field Visit

You could visit any of the industry and show the 5S Safety system and check the various points of safety with the help of housekeeping checklist

UNIT 3.3: Waste Management

Unit Objectives

At the end of this unit, students will be able to:

1. Discuss about waste management
2. Know about elements of waste management
3. Know about methods of waste management

Say

- Waste management is gathering, transport, recycling, processing and disposal of waste materials. Waste management is carried by recovering resources from waste materials.
- Waste may be classified as garbage, rubbish, industrial wastes, mining wastes etc.
- Industrial waste can be of two types: non-hazardous and hazardous waste.
- Waste management strategy involves legal and proper decomposition of waste.
- Methods of waste management are segregation, composting and burning.

Elaborate

Elements of a waste management strategy

Good waste management practices involve much more than that disposing of waste legally and properly. Strategy for the management of industrial waste can include the subsequent elements:

- Current waste management procedures and primary audit of wastes produced.
- Risk assessment to find that stowage and handling procedures does not possess any health or environmental risk.
- Identification of options for reuse, waste reduction, recovery assessment and recycling of waste.
- Identification of best practicable environment! There should be an option for dumping of waste and residues.
- Selection of the contractor offering the best service and audit of potential waste management contractors.

Waste management methods

1. **Segregation:** Separation of waste using different containers is necessary because plastics, building materials, glass and waste from the site work could take a really long time period to decompose. This is the reason, thus, it is required to maintain green practices so waste management should be done

Fig 3.3.1: *Waste segregation*

with proper segregation. Thus we make sure to support you in removing hazardous waste from compostable non-hazardous solid waste, organic waste, recyclable materials and other regulated material.

2. **Composting:** This waste management process turns waste into organic compounds that you can use to feed plants. In terms of the environment advantages this is actually beneficial technique. Making use of this method, it's easy to turn unsafe organic products into safe compost.

3. **Burning:** If your approach is not towards disposing materials and other wastes, then burning method will be a good approach for you. If waste is bio-degradable or cannot produce hazardous gases after burning, you can burn the waste.

Fig 3.3.2: *Waste Compositing*

Ask

- You could ask the elements of waste management strategy
- You could ask from the students' different method of waste management

Field Visit

- You could visit any of the industry and show the waste management system and how they do the segregation of waste.

Notes

Skill India
कौशल भारत-कुशल भारत

सत्यमेव जयते
GOVERNMENT OF INDIA
MINISTRY OF SKILL DEVELOPMENT
& ENTREPRENEURSHIP

N·S·D·C
National
Skill Development
Corporation
Transforming the skill landscape

4. Tungsten inert gas (TIG) welding

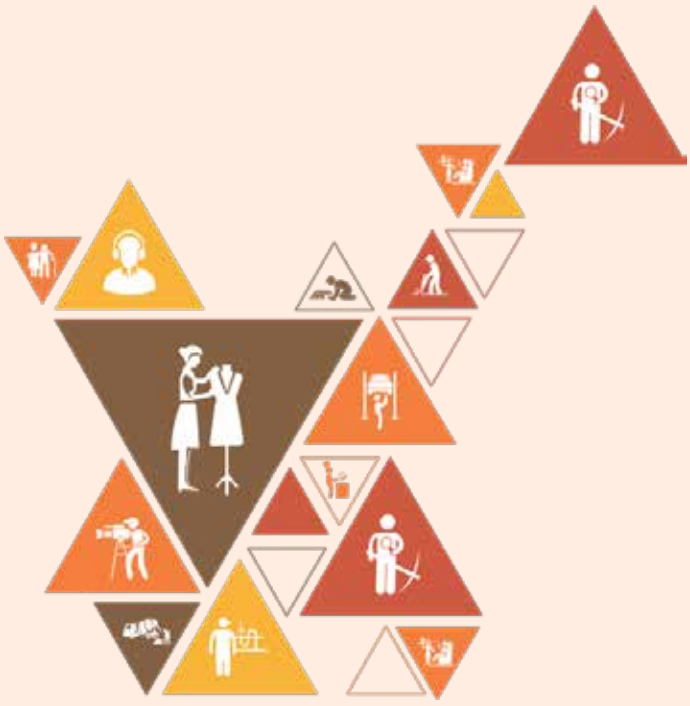

CSC/N0141

Key Learning Outcomes

At the end of this module, students will be able to:

1. Know about welding and welding process
2. Know about different types of welding
3. Know about TIG welding process
4. Know about advantages and limitations of TIG welding
5. Know about welding joints and design
6. Know about types of joints
7. Know about welding positions
8. Know about welding drawings
9. Know about welding symbols

UNIT 4.1: Basic welding introduction

Unit Objectives

At the end of this unit, you will be able to:

1. Know about welding process
2. Know about types of welding
3. Know about basis of welding process selection

Resources to be used

- Invigilator can use the available objects such as a marker, duster, pen, notebook, participant manual etc.
- PC with LCD Projector or Flip Chart

Do

- Welcome and greet the participants. Revise the learning's of the previous sessions and ask them if they have any doubts.

Say

- Welding is a material joining process in which at least two sections are consolidated by reasonable use of heat as well as force.
- A weld is being made when cut off pieces of metal are joined and make one piece when heated to a temperature suitably high to cause it melt and flow together. Pressure might be or might not be utilize to drive the pieces together.
- Welding is a potentially hazardous activity and precautions are required to avoid electrocution, fire and explosion, burns, electric shock, vision damage, inhalation of poisonous gases and fumes, and exposure to intense ultraviolet radiation.

Elaborate

Welding process can be classified into different categories depending upon the following criteria:

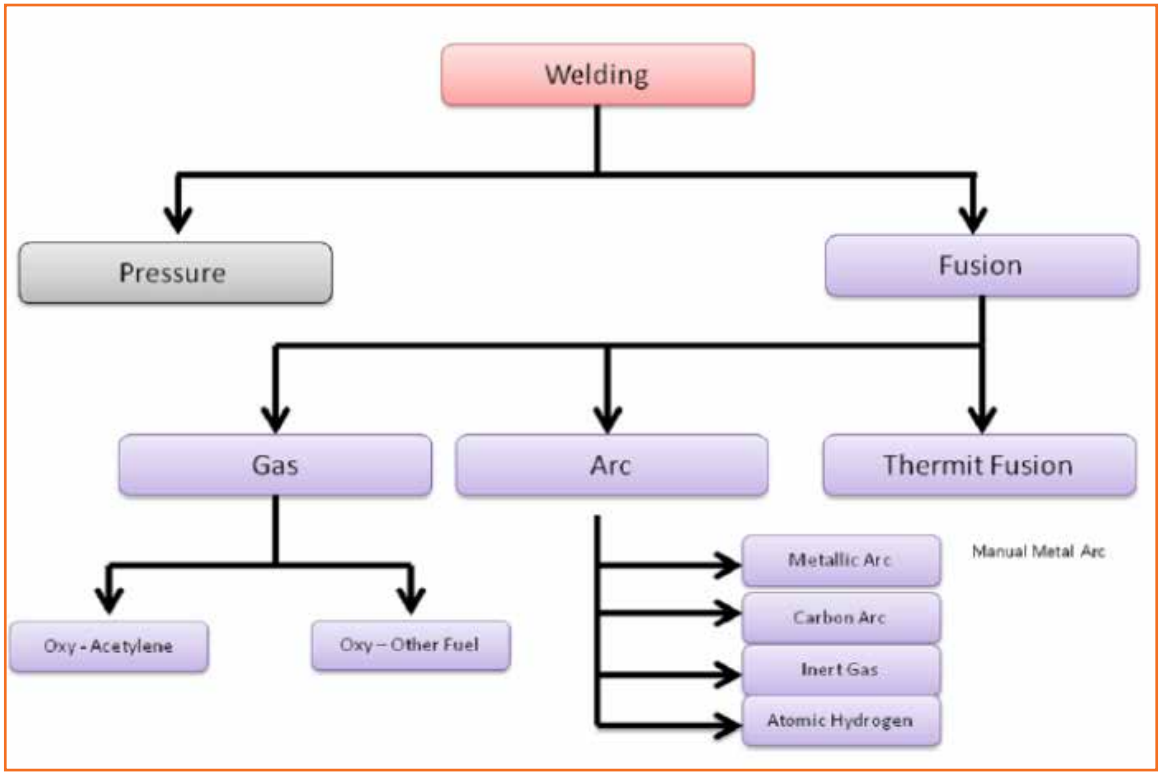

Fig 4.1.1: *Welding classification*

A few of the factors that must be considered when choosing a joining process include:

- **Accessibility of tools:** The types, ability and state of tools which is being used to make the welds.
- **Repetitiveness of the procedure:** what number of the welds will be required to finish the employment, and are they all the similar?
- **Quality prerequisites:** Is this weld going to be utilized on furniture, to repair a piece of tool, or to join a pipeline?
- **Place of work:** Will the weld be in a store or on a remote work location?
- **Supplies to be attached:** Does the parts which are being used made out of a normal metal or some exotic alloy?
- **Look of the completed manufactured goods:** Is the weldment made needed only to experiment a thought, or is it a final construction?
- **Size of the parts to be fixed:** Are the parts little, huge, or distinctive sizes, and would they be able to be moved or should they be welded in position?
- **Time accessible for work:** Is this a surge work requiring a quick repair, or is there time to take into consideration pre-and post-weld cleanup?
- **Ability or practice of specialists:** Do the welders have the skill to carry out the occupation?
- **Cost of equipment:** Will the weldment be justified regardless of the cost of unique hardware materials or completing time?
- **Code or specification requirements:** Often the selection of the process is dictated by the governing agency, codes or standards.

The following methods are used to perform welding, cutting or brazing operations.

- **Manual:** The welder is required to control the whole procedure.
- **Partially automatic:** The filler metal is included naturally, and all other control is done manually by the welder.
- **Machine:** Operations are done mechanically under the inspection and correction of a welding worker.
- **Automatic:** Operations are performed repeatedly by a machine that has been programmed to do an entire operation without interaction of the operator.
- **Automated or robot:** Operations are performed repeatedly by a robot or other machine that is programmed flexibly to do a variety of processes.

Ask

- You could ask the concept of welding
- You could ask the classification of welding processes
- You could ask the factors of the joining process for a particular job
- You could ask the methods are used to perform welding, cutting or brazing operations.

Field Visit

- You could visit the automobile industry and explain how welding works
- Ask them to get into pairs for visit
- Go around and make sure they are seeing the process properly

Notes for Facilitation

- Summarize the main points.
- Ask participants if they have any doubts.
- Encourage them to ask questions.
- Answer their queries satisfactorily.

UNIT 4.2: GTA or Tungsten inert gas (TIG) welding

Unit Objectives

At the end of this unit, you will be able to:

1. Know about TIG welding
2. Know about TIG welding process
3. Know about advantages and disadvantages of TIG welding
4. Know about applications of TIG welding

Resources to be used

- Invigilator can use the available objects such as a marker, duster, pen, notebook, participant manual etc.
- PC with LCD Projector or Flip Chart

Do

- Welcome and greet the participants. Revise the learning's of the previous sessions and ask them if they have any doubts.

Say

- The gas tungsten arc welding (GTAW) process is also known as TIG welding.
- GTAW process makes welding of aluminium and magnesium easier. The welds made are clean and free from corrosion.
- After GMAW process, GTAW was the only used for welding reactive materials like aluminium, magne¬sium, titanium etc., doesn't depend on material thickness.
- TIG welding is a welding process that uses a power source, a shielding gas and a TIG hand piece.
- Pulse TIG is a versatile welding process for all positions and material thicknesses

Elaborate

TIG wielding process

TIG welding process requires a power source, shielding gas and TIG torch. First, power is taken from power source, than move TIG torch fitted with tungsten electrode. When current starts flowing, an electric arc creates between electrode and workpiece. Use shielding gas for protecting the tungsten and the welding zone. The electric arc generates temperatures of around 19,400oC.

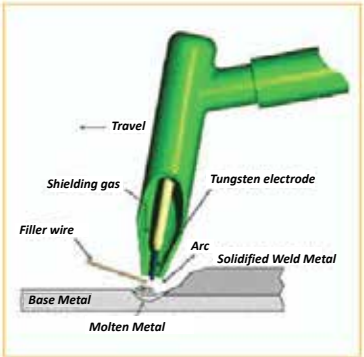

Fig 4.2.1: *TIG Welding process*

Applications of TIG welding

1. Welding of critical pipes and pipelines, for example pressurized pipes,
2. Manufacturing heat exchanger pipes and combinations,
3. Manufacturing stainless pipe and tubes,
4. Thin materials from ~ 0.1 mm and higher,
5. Thin stainless steel welding,
6. Aluminum welding,
7. Special materials welding, e.g. Titanium,
8. Fixing and repairing works,
9. Iron and Steel industry.
10. Space and aircraft industry.
11. Railway and Wagan Industry

Pulsed TIG consists of:

- **Peak Current -** For non-pulsed TIG, set it at higher value.
- **Background Current -** This current is set at lower value than peak current. It is the bottom current at which pulse will drop and sufficient to remain the arc active.
- **Pulses Per Second -** It is calculated as number of times per second at which weld current reaches peak current.
- **% on Time** - It is the duration at which pulse is at peak value and calculated as percentage of total time.

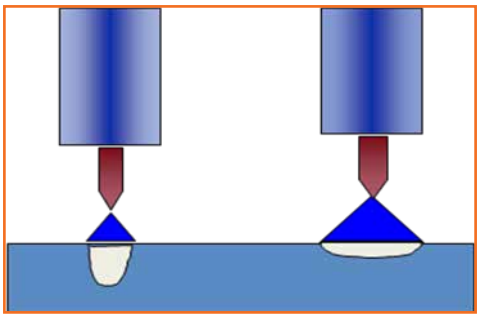

Fig 4.2.2: *Pulse TIG welding*

- **Down Slope** - It signifies the path and time taken by welding current for making one pass at the end. Down slope prevents irregular cooling of final weld pool and stops formation of pinholes in the weld.
- **Post Flow** - Time taken by shielding gas to continue after the welding current has stopped is known as pre flow.
- **Pre-Flow** – Pre-flow protects the start of weld from any contamination and ensures the flow of shielding gas before the starting of welding current.

Explain

- Explain advantages and limitations of TIG welding.
- Explain applications of TIG welding.
- Explain advantages and limitations of pulse welding.
- Explain applications of pulse welding.

Ask

- You could ask the TIG welding process
- You could ask the advantages and limitations of TIG welding
- You could ask the applications of TIG welding
- You could ask about the pulsed TIG and its parts

Notes for Facilitation

- Summarize the main points.
- Ask participants if they have any doubts.
- Encourage them to ask questions.
- Answer their queries satisfactorily.

UNIT 4.3: Welding Joints and joint preperation

Unit Objectives

At the end of this unit, you will be able to:

1. Know about welding joint types
2. Know about design preparation

Resources to be used

- Invigilator can use the available objects such as a marker, duster, pen, notebook, participant manual etc.
- PC with LCD Projector or Flip Chart

Do

- Welcome and greet the participants. Revise the learnings of the previous sessions and ask them if they have any doubts.

Say

- Welds are made by joining different pieces of metal to make the weldment. Components used for creating the weldment might be sheet, rolled plate, channels, forgings, casting or billets etc.
- To prepare weldments, it is necessary to combine the joint sorts for weld sorts to prepare weld joints for joining those differentiate parts.
- Weld joints are designed to exchange the focus on components of the joint. Forces and loads are introduced at special points and are passed on to special areas during the weldment.
- All weld joints can be classified into two basic categories: full penetration joints and partial penetration joints.
- The quality of weld joints depends on the span of the weld, as well as on weld metal quality.
- The weld joint is planned in such a way that the cross-sectional region of weldment is as minimum as possible.
- There are many joint design and preparation like carbon and low alloy, aluminium and aluminium alloy and stainless steel alloy.

Elaborate

The five basic types of welding joints are:

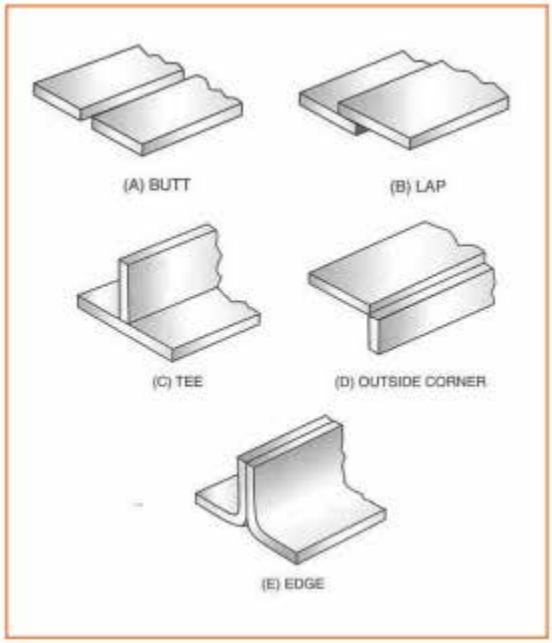

Fig 4.3.1: *Joint types*

1. **Butt Joints:** These joints are made by two bots of metal pieces; both are at 90 degree edges to the surface. Butt joints are utilized with thin sheet metals which are welded with a solitary pass. Problems occur with butt welds are the slag formation, porosity, or breaking of sheet. Types of butt welds are: single welded butt joints, twofold welded butt joint, and open or closed butt joints. Common butt joints are: Square butt joint, V joints, J joints and U joints.
2. **T-Joints:** When one section of metal piece has to be joined to the focal point of another part and makes shape of a “T”, then T-joints can be used.
3. **Lap joint:** A Lap joint is framed when one piece to be welded is set down and another piece is covered to shape an edge for filet welding or a range to permit attachment or opening welding.
4. **Corner joint:** corner joint is framed by putting one piece to be welded on the other so that a corner is shaped. The corner might be Flush; Half Open; or Fully Open
5. **Edge joint:** When two edges of the pieces to be welded come together then an edge joint is formed.

Welds applicable to basic joint combinations

Weld type	Symbol	Butt	Corner	Edge	Lap	Tee
Fillet		Special	Yes	Special	Yes	Yes
Plug or slot					Yes	Yes
Spot or projection					Yes	Special
Seam			Special		Yes	Special
Square groove		Yes	Yes	Yes		Yes
Vee groove		Yes	Yes	Yes		Yes
Bevel groove		Yes	Yes	Yes	Yes	Yes
U groove		Yes	Yes	Yes		
J groove		Yes	Yes	Yes	Yes	Yes

Weld type	Symbol	Butt	Corner	Edge	Lap	Tee
Flare V groove		Yes	Yes			
Flare bevel groove		Yes	Yes		Yes	Yes
Backing weld		Combine	Combine			Combine
Surfacing						
Flange edge				Yes		
Flange corner			Yes			

Table 4.3.1: *Weld joints basic information*

Ask

- You could ask the types of welding joints
- You could ask the common butt joints
- You could ask the purpose of weld joints
- You could ask the categories of weld joints

Activity

- Conduct a skill practice activity.
- Ask the students to assemble together.
- Explain the purpose and duration of the activity.
- Give the weld type and show the symbols and ask the types of welding joints

Skill Practice	Time	Resources
Weld type	1 hour	Symbols of weld

Do

- Ask them to get practice the activity alone.
- Go around and make sure they are doing it properly.
- Wrap the unit up after summarizing the key points and answering questions.

Notes for Facilitation

- Summarize the main points.
- Ask participants if they have any doubts.
- Encourage them to ask questions.
- Answer their queries satisfactorily.

UNIT 4.4: Weld types and positions

Unit Objectives

At the end of this unit, you will be able to:

1. Know about weld types
2. Know about different welding positions
3. Know about position naming standards

Resources to be used

- Invigilator can use the available objects such as a marker, duster, pen, notebook, participant manual etc.
- PC with LCD Projector or Flip Chart

Do

- Welcome and greet the participants. Revise the learning's of the previous sessions and ask them if they have any doubts.

Say

- **Weld types**
  - **Fillet Welds:** A fillet weld joins two surfaces at an approximate right angle to each other.
  - **Groove Welds:** The groove weld refers to beads that are deposited in a groove between two members to be joined.
  - **Plug Weld:** Plug welds are circular welds made through one member of a lap or tee joint joining that member to the other.
  - **Slot Weld:** This is a weld made in an elongated hole in one member of a lap or tee joint joining that member to the surface of the other member that is exposed through the hole.
- All welding is done in one of four positions:
  1. Downhand / Flat
  2. Horizontal
  3. Vertical
  4. Overhead

- A number is used to define the position and an F for Fillet or G for groove refers to the type of weld.
  - 1 refers to a flat position, either 1F or 1G
  - 2 refers to a horizontal position, either 2F or 2G
  - 3 is a vertical position, either 3F or 3G
  - 4 is an overhead position, either 4F or 4G

Elaborate

There are several types of fillet weld:

- In full fillet weld, span of the weld is same and thickness of the thinner part is combined.
- An irregular fillet weld, two discontinuous lines of weld made on the joint. It is like TEE joint where the fillet increases and in contrast with the other line.
- Chain Intermittent Fillet Weld: Refers to two lines of intermittent fillet welds in a lap joint or T where the welds in one line are approximately opposite those in the other line.

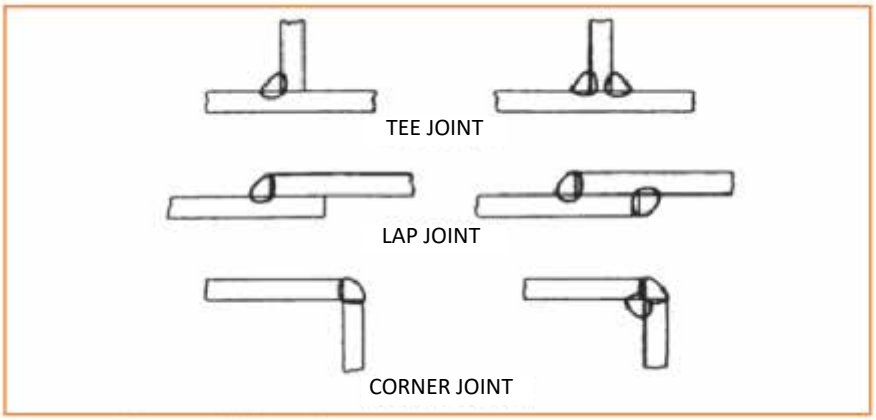

Fig 4.4.1: Application of fillet welds

Groove Welds: Groove welds are the second most used welds. Groove welds are of seven types.

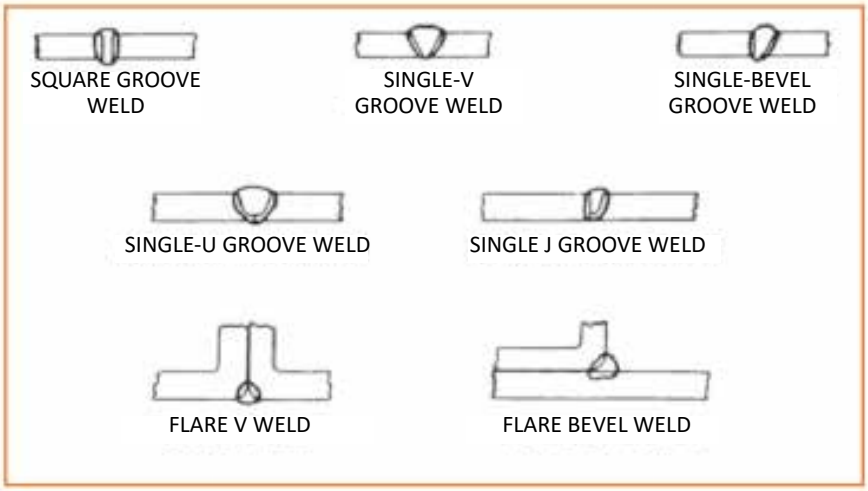

Fig 4.4.2: Groove welds

Plug and slot Weld

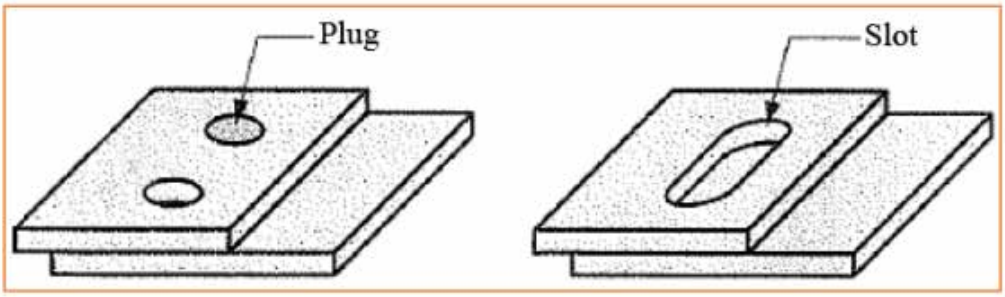

Fig 4.4.3: *Plug and slot weld*

Welding Positions

1. **Downhand / Flat Position Welding:** In downhand position, the welding is done on the upper side of the joint. Level welding is the favored term; in any case, a similar position is at times called downhand.
2. **Horizontal Position Welding**: In this position, the weld axis is a line passing through the length of the weld, which is opposite to the cross segment at its focal point of gravity.
3. **Vertical Position Welding**
   a) In this position, the weld axis is vertical.
   b) In vertical position pipe welding, the pipe axis is vertical and welding is done in even position.
4. **Overhead Position Welding:** In this position, the welding is done underside of a joint.
5. **Pipe Welding Positions:** Pipe welds are made under various prerequisites and in various welding circumstances. The welding position is managed by the occupation. When all is said in done, the position is settled, yet now and again can be moved for level position work.

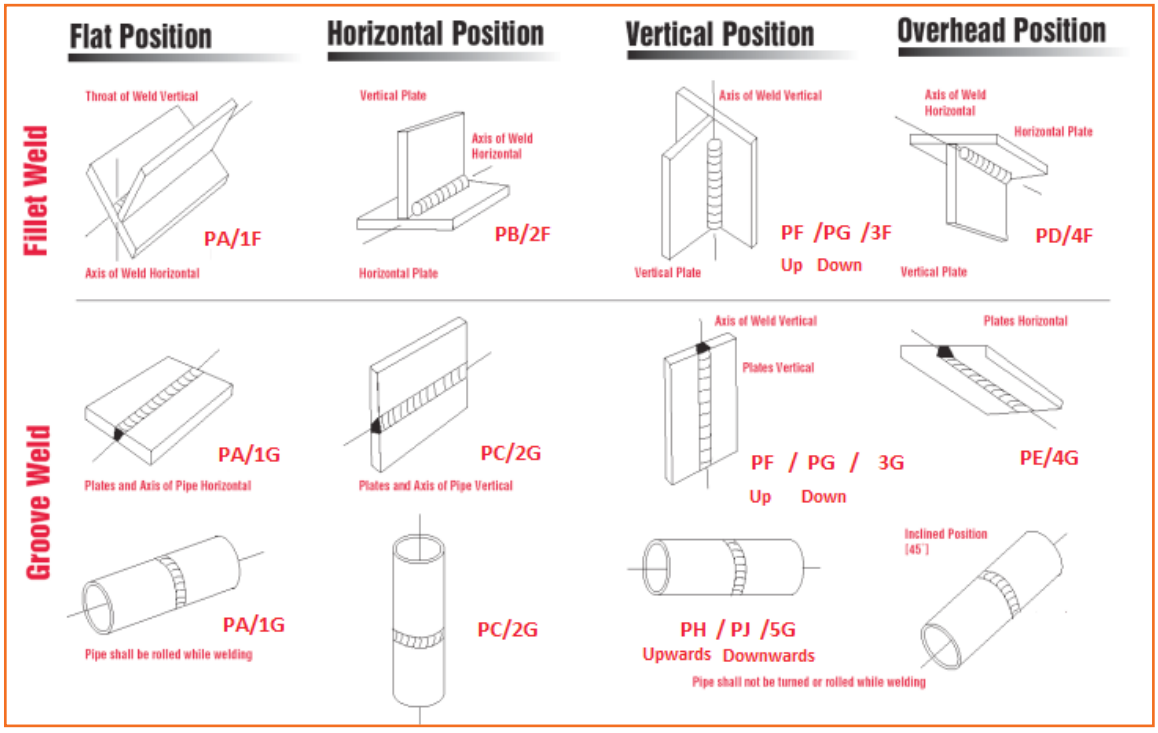

Fig 4.4.4: *Welding positions*

Ask

- You could ask the types of weld
- You could ask the types of fillet welds
- You could ask how many positions welding is done? Name them.
- You could ask about the different welding positions

Lab

You could show the different position of welding.

UNIT 4.5: Understanding the engineering drawing

Unit Objectives

At the end of this unit, students will be able to:

1. Discuss about basics of engineering drawing
2. Know about orthographic projection views
3. Discuss about concept of quadrants
4. Know about engineering standards
5. Know about welding symbols

Resources to be Used

- Available objects such as a duster, pen, notebook, drawing tools etc.

Do

- Welcome and greet the participants. Revise the learnings of the previous sessions and ask them if they have any doubts.

Say

- The reason for engineering drawing is to pass on graphically the thoughts and fundamental data for the development or examination of structures, machines or frameworks.
- It includes basic knowledge of engineering drawing and engineering drawing standards.

Notes for Facilitation

- You could ask the students about the purpose of engineering drawing.

4.5.1: Understanding the engineering drawing

Say

- Engineering drawing a graphical language utilized by specialists and other specialized faculty related with this profession.
- In basic engineering drawing, orthographic projection method is used.
- Orthographic drawings are the establishment of technical and machine drawings.

Elaborate

- The orthographic projection demonstrates the object like it views from the front, right, left, base, top or back, as per the projections in first-angle or third-angle projection. Third angle orthographic projection is standard projection for every single mechanical drawing.
- Orthographic projection is the technique for speaking to the correct state of an object in at least two perspectives, on projection planes commonly at right angle position to each other or by drawing perpendiculars from object to planes.
- For example: Orthographic views of a cylinder are

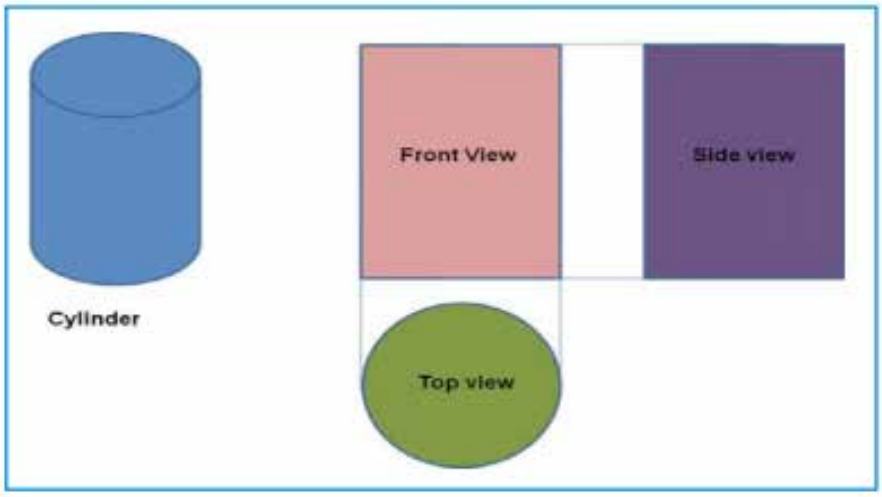

Fig 4.5.1: *Orthographic projection of a cylinder*

Do

- Tell them about the orthographic projection and quadrants
- Show them the orthographic views
- Demonstrate them the first and third angle of projection

Demonstrate

For basic engineering drawings; two guidelines are regularly being used in orthographic projection; the first angle projection also known as European projection and third angle projection also known as American projection. Perspectives are indistinguishable in both techniques for projection with the exception of their relative positions on the drawing paper. So, let's understand them:

1st angle Projection – In 1st angle projection, the front view is reference VIEW and other views are drawn as "shadows" of that view. For example, the left hand side view is drawn on the right side of front view. So, the top view (plan) is drawn at the base of front view, and so on.

Step 1: Rotate the Horizontal Plane Clockwise through 90^0.

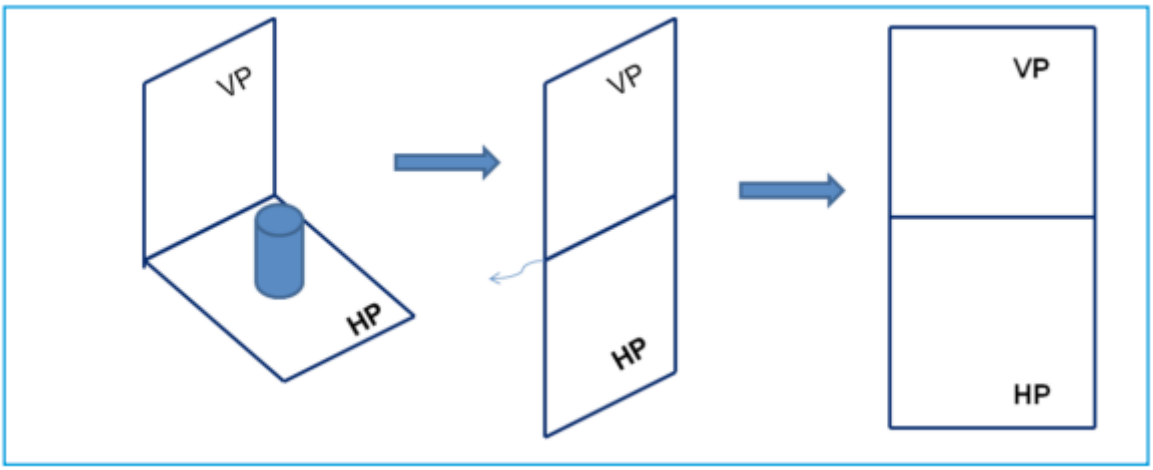

***Fig 4.5.2**: First angle projection*

Step 2: Rotate the planes clockwise through 90^0 to face the observer.

3rd angle Projection – In 3rd angle projection, the front view is the premise (similarly as before) however other views are drawn as "reflections" of font view. In this projection, the left hand side view is drawn on the left hand side of front view. Additionally, the top view (plan) is drawn over the front view.

Step 1: Rotate HP through 90^0 in the clockwise direction

Step 2: Rotate the planes through 90^0 in the clockwise direction to face the observer

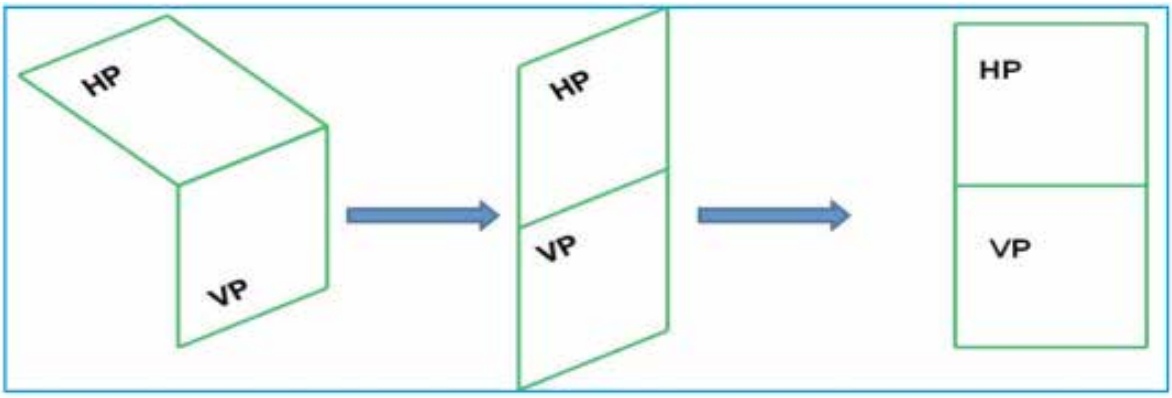

***Fig 4.5.3:** Third angle projection*

Tips

For drawing technical drawings, some tips given are:

- **Visualize Object:** Visualize the definite and clear picture of object in mind, and then a decent graphical picture can be created.
- **Determine Views:** The perspectives might possibly be the same with respect to a scale drawing; e.g., the thickness or state of the line can be utilized to draw a view.
- **Determine Size:** Determine the size of sheet of paper for portraying the object. Size of the sheet should be enough to show all details the object, however permit a lot of space for measurements, notes, and particulars.
- **Locate Center Lines:** When going to start drawing, always locate the inside lines of object.
- **Block in Main Outlines:** Check the extents of width to height in drawing. Select one edge of the object as a unit and assess the proportionate lengths of alternate edges.
- **Complete Detail:** Once the primary blueprint is acceptable, fill the points of interest for right extent.
- **Dimension Lines and Arrowheads:** When the state of the object has been drawn completely, then include the measurement arrowheads and lines. Don't make any estimation until the work is finished.
- **Dimensions:** Now embed the measurements on the drawing. These measurements can be obtained by a steel cable. Take all estimations from completed surfaces.
- **Titles and Notes:** Titles and notes should be embedded together with the date mentioned on sheet.
- **Check:** Make a last check after completing the draw. Do it carefully.

Ask

- You could ask what are the systematic order of application should be followed for both idea sketches and sketches from objects
- You could ask about the quadrants

Notes for Facilitation

- You could ask why orthographic projection method is used.

4.5.2: Engineering drawing standards

Say

- Engineering drawings, being one of the many types of specialized form of exchanging information, need to satisfy some acknowledged guidelines and ISO standards.
- ISO most prescribed paper sizes for specialized drawings are known as A-FORMATS.
- In technical drawings, various type of lines and line styles are used to provide the desired information.
- Dimensions express the appropriate sizes of features. Distances might be shown with either of two accepted forms of dimension: ordinate and linear.

Elaborate

Distances might be shown with either of two accepted forms of dimension: ordinate and linear.

- In ***linear dimensioning***, two parallel lines, also known as "extension lines," separated at the distance between two components, which are shown at every element. A line perpendicular to the extension lines, known as "dimension line," is appeared between and ending at the extension lines. The distance is shown in numerical form at the midpoint of the dimension line.
- In ***ordinate dimensioning***, an origin is established between one horizontal and one vertical extension line for the complete object view. The small circles placed at the ends of these lines shows the origin of line. Measurements along the x- and y-axes are shown by these extension lines, with the distances written in numerical form at the ends of these lines.

Typical standards of lines are summarized below.

- **Visible** – these are sequential lines used to represent edges which can be seen directly from a specific angle?
- **Hidden** – these lines are used to represent edges which can't be seen directly.
- **Center** – These lines are used to represent the axes of circular features. These lines are long and short dashed.
- **Cutting plane** – are lines that used to define sections for section views, these are thin and medium dashed lines, or also thick, long and double short-dashed lines.
- **Section** – These are thin lines, represent section views which results due to cutting of object. These are also known as "cross-hatching."

- **Phantom** – These lines indicates feature or component of the assembly which is not the described part or assembly. These lines are alternately long and double short-dashed thin in shape.

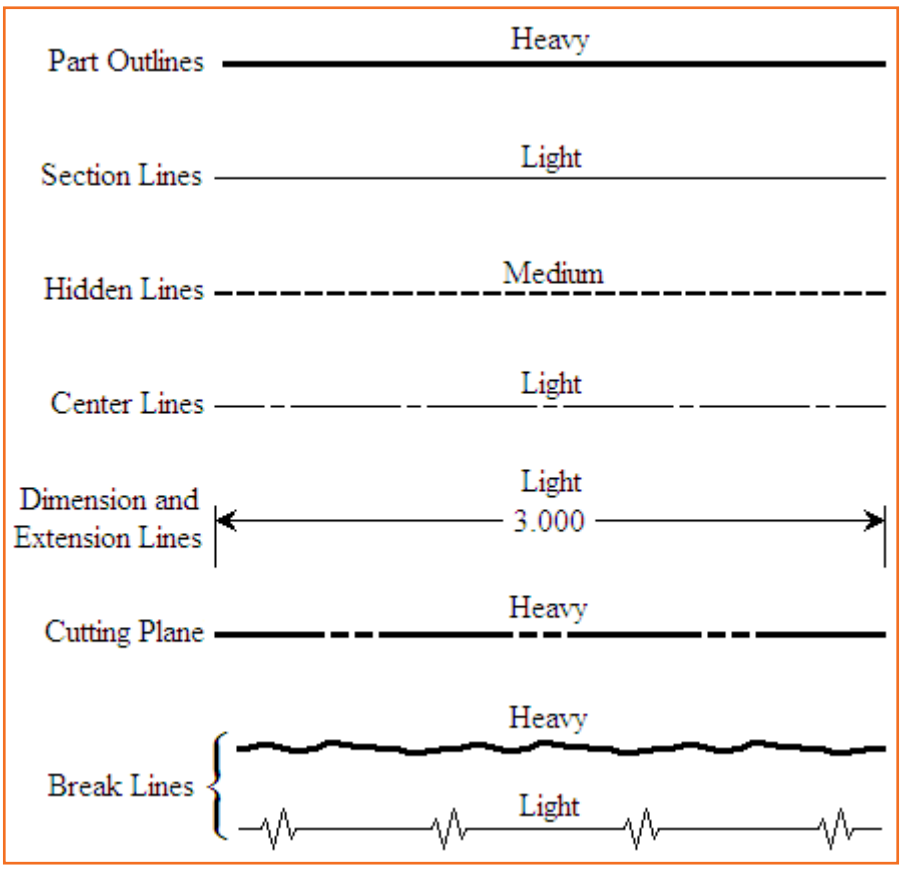

Fig 4.5.4: *Different types of lines*

Ask

- You could ask the standardized form of dimension
- You could ask what are the Basic drawing tools and equipments dimensioning
- You could ask about the different lines used in engineering drawing

4.5.3: Welding symbols

Say

- At the point when welds are indicated on building and creation drawings, an enigmatic arrangement of images issued as a kind of shorthand for depicting the sort of weld, its size, and other preparing and completing data.
- Welding symbols are part of drawing which interprets the basic cross-segment of weld.

Elaborate

A welding symbol may include the following elements:

- Reference Line
- Arrow
- Basic Weld Symbol
- Dimensions & Other Data
- Supplementary Symbols
- Finish Symbols
- Tail
- Specifications, Process, Or Other References

Reference Line:

It is a straight line represents the required values drawn near to it. This line is drawn towards the joint it depicts.

Arrow:

It is another welding symbol set at either end of the reference line and associates the reference line to the joint which has to be welded

Types of welds and their symbols

- Every weld has its own symbol of welding, which is commonly put close to the center point of the reference line.

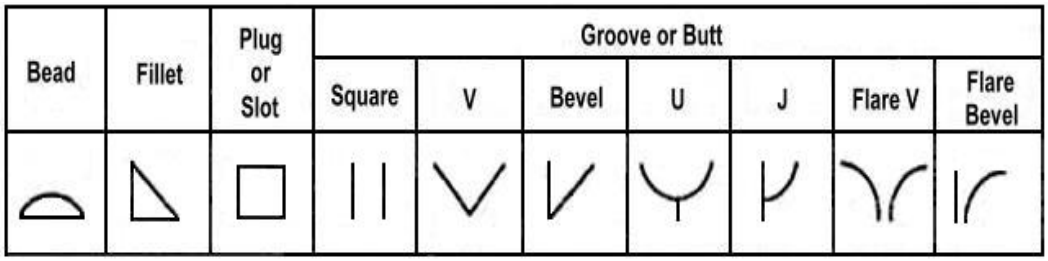

Fig 4.5.5: *Types of weld and their symbols*

- **Fillet weld:** The filet weld is utilized to make corner joints, lap joints and T joints. Fillet welds are generally triangular in cross-area, but there shape is generally not an exact triangle
- **Groove weld:** The groove weld is used to make edge-to-edge joints. There are numerous approaches to make groove welds, the distinctions depends on the geometry of the components has to be weld and the readiness of edges. Square, V, J, U, angle weld are types of groove weld.

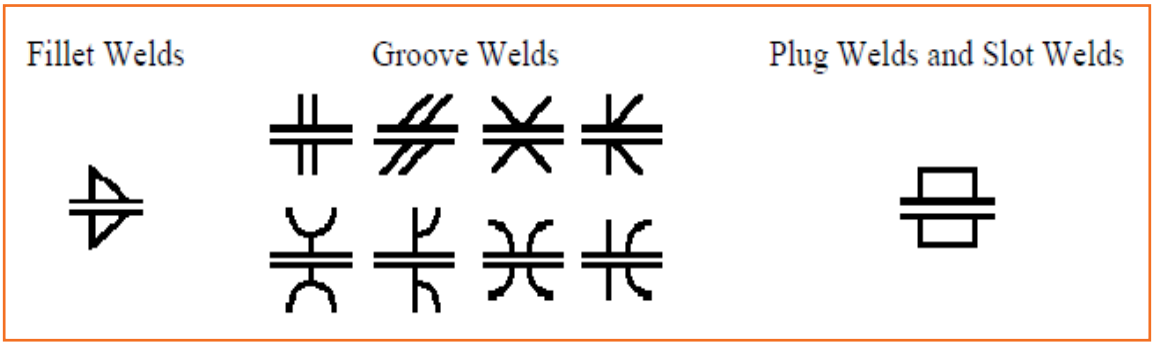

Fig 4.5.6: *Types of welds symbol presentation*

Finishing symbols

After the weld has been made, there might be a completing procedure required. A portion of the more typical completing procedures are appeared above.

C - CHIPPING
G - GRINDING
M - MACHINING
R - ROLLING
H - HAMMERING

WELDING FINISHES

Fig 4.5.7: *Finishing symbols*

Ask

- You could ask the elements of a welding symbol

Notes for Facilitation

- Summarize the main points.
- Ask participants if they have any doubts.
- Encourage them to ask questions.
- Answer their queries satisfactorily.
- Tell participants to complete the questions at the end of the unit.
- Ensure that every participant answer all the questions.

Skill India
कौशल भारत-कुशल भारत

सत्यमेव जयते
GOVERNMENT OF INDIA
MINISTRY OF SKILL DEVELOPMENT
& ENTREPRENEURSHIP

N·S·D·C
National Skill Development Corporation
Transforming the skill landscape

5. TIG welding equipments, tools and measuring instruments

Unit 5.1 – TIG welding equipments

Unit 5.2 – Tools required

Unit 5.3 – Measuring instruments required

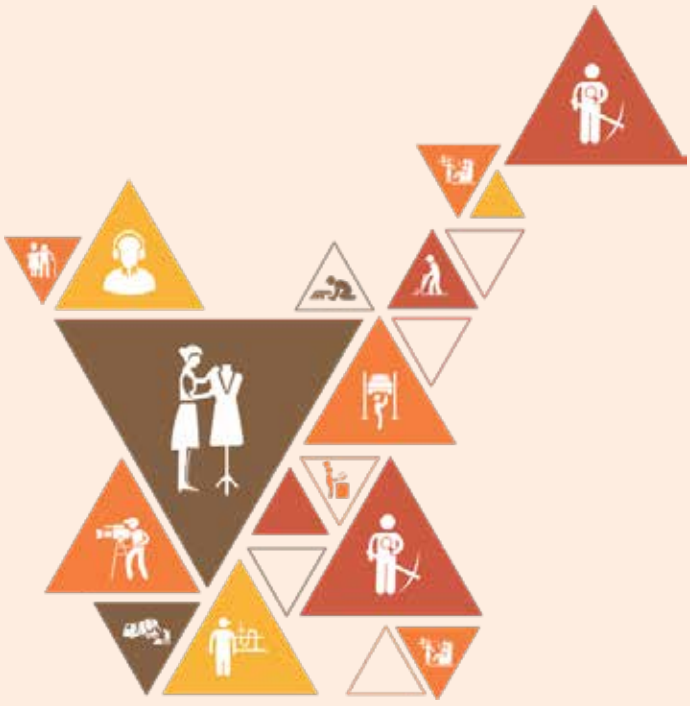

CSC/N0141

Key Learning Outcomes

At the end of this module, students will be able to:

1. Know about equipments required for TIG welding setup
2. Know about selection and specifications of equipments
3. Know about hand tools required during TIG welding
4. Know about use of tools required
5. Know about measuring instruments required during TIG welding
6. Know about use of measuring instruments required

UNIT 5.1: TIG welding equipments

Unit Objectives

At the end of this unit, you will be able to:

1. Know about equipments required for TIG welding
2. Know about specifications of equipments
3. Know about how to select equipments

Resources to be used

- Invigilator can use the available objects such as a marker, duster, pen, notebook, participant manual etc.
- PC with LCD Projector or Flip Chart
- TIG welding equipments

Do

- Welcome and greet the participants. Revise the learnings of the previous sessions and ask them if they have any doubts.

Say

The major components required for TIG welding are:

- Power source
- Tungsten electrode
- Shielding gas supply
- Torch
- Hose assembly
- Gas nozzles
- Flowmeter
- Filler rods

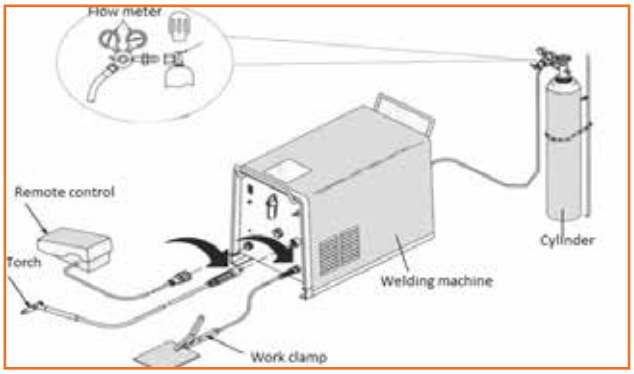

Fig 5.1.1: *TIG Welding setup*

Notes for Facilitation

- You could ask about the major components of TIG welding

5.1.1.1: Power source

Say

- The TIG welding machine can use either AC or DC power source. The type of machine for particular TIG weld jobs depends on the materials to be weld.
- The welding power supplies most commonly seen can be categorized within the following types: Transformers, generator and alternator, inverter and rectifier.
- Mainly transistor and inverter power sources are utilized for TIG welding.
- For GTAW process, all three types of current polarities can be utilizd. The major difference betwwen all types of current is their distribution of heat and cleaning of arc.

Elaborate

- **DC power source:** Usually DC power source is used for TIG welding, because it generates intense arc and transfer heat to the workpiece.

  The advantages are:

  - the smaller size makes them
  - arc ignition is easier
  - have special operating features like pulsing of current
  - the output can be pre-programmed for mechanised operations
- **AC power source**: AC power sources are generally used for welding of materials like aluminium.

  Disadvantages of conventional sine wave AC compared with DC are:

  - Extra scatter arc.
  - At every reversal of current, HF is needed for reigniting the arc.
  - Electrode extreme heating makes difficult to maintain tapered point.

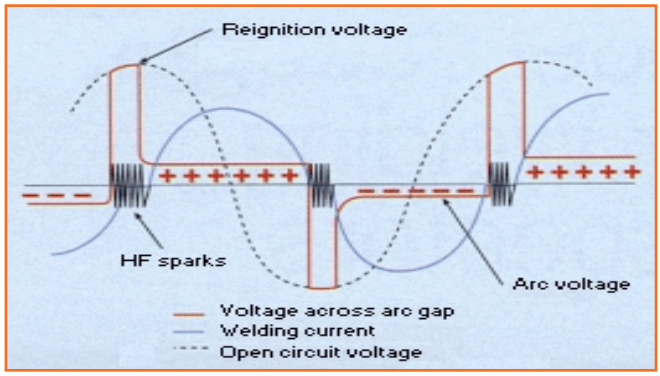

Fig 5.1.2: *AC Sine wave*

Types of welding current used for TIG

1. **DCSP - Direct Current Straight Polarity** - Connect tungsten electrode with the negative terminal, this is known as direct current electrode negative (DCEN) or DCSP.

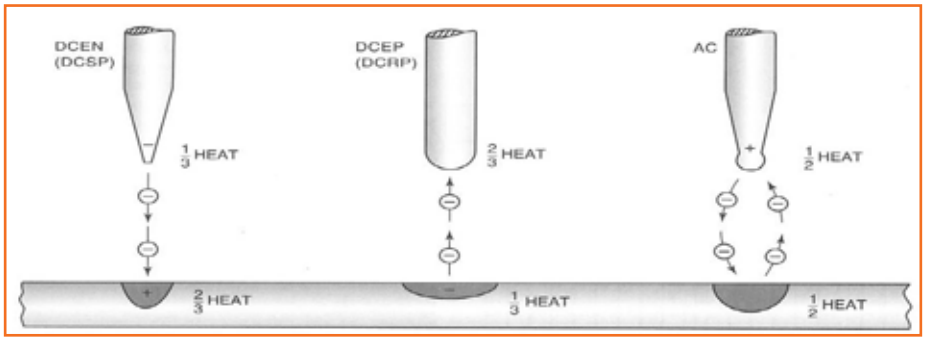

Fig 5.1.3: *DCSP*

2. **DCRP - Direct Current Reverse Polarity** - Connect tungsten electrode to the positive terminal of power source, this is known as direct current electrode positive (DCEP) or DCRP DCRP polarity is more inconsistent than DCSP, because metal welded will not emit electrons as freely as tungsten.

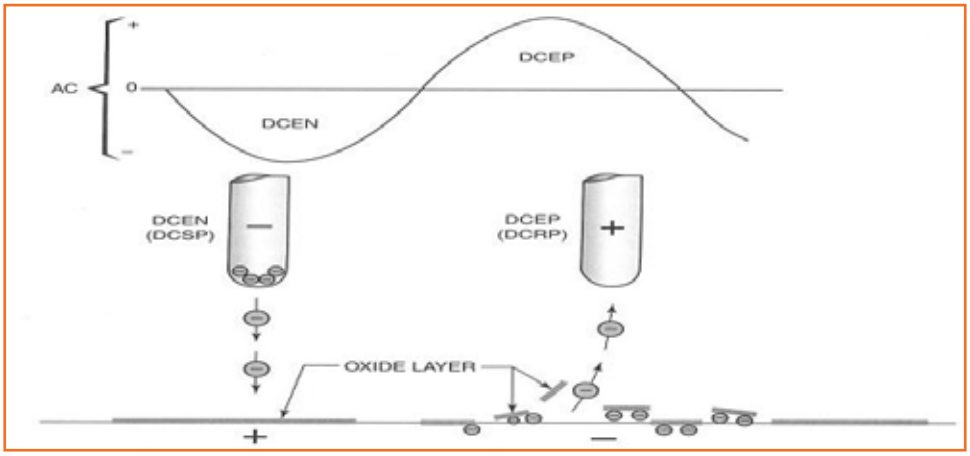

Fig 5.1.4: *DCRP*

3. **AC - (Alternating Current) -** For white metals like aluminium and magnesium, it is the preferred welding current. The heat input to the tungsten is averaged out as the AC wave passes from one side of the wave to the other.

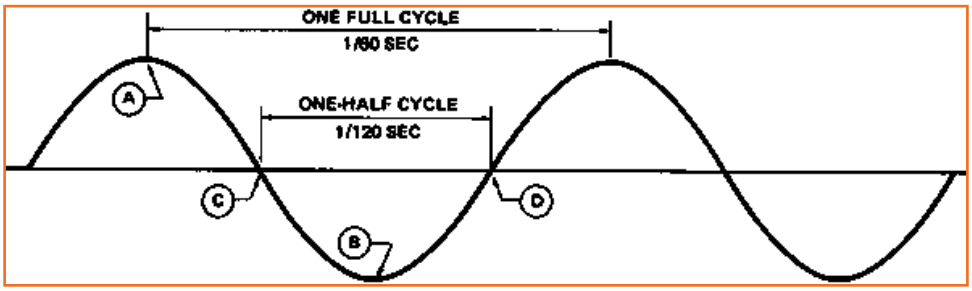

Fig 5.1.5: *AC Cycle*

Commonly used welding power supplies are:

- **Transformers:** A transformer type power supply changes over the moderate voltage and current from utility mains (ordinarily 115 or 230 VAC) into low voltage between 17 to 45 (open-circuit) volts and high current 55 to 590 amperes supply.
- **Generator and alternator:** These power supplies changes mechanical energy into electrical energy. In this setup the utility power is changed over first into mechanical energy at that point and then again into electrical energy to accomplish the progression down impact like a transformer.
- **Inverter:** Amperage range of inverter welding machines is much smaller than other types of machines. This smaller size of machine makes it portable and increases the energy efficiency.
- **Rectifiers:** Alternating welding current can be changed over to direct current by utilizing a progression of rectifiers. A rectifier enables current to stream in one direction only.

Do

Things to check on TIG power sources are

- Amperage for job is sufficient or not.
- Can amperage go adequate low for light material and high for thick material?
- Power Supply required is 400 Volt, 230 Volt. It is single phase or three phase.
- Weight of material is a problem or not.
- Engine driven power source is required or not.
- Mutipurpose power source is better or not for job.
- It requires AC power source or DC power source for welding.

Ask

- Ask the Concept of DC and AC power source
- Ask the advantages of DC power source
- Ask the types of welding current used for TIG
- Ask how things to check on TIG power sources

Notes for Facilitation

- Summarize the main points.
- Ask participants if they have any doubts.
- Encourage them to ask questions.
- Answer their queries satisfactorily.

5.1.1.2: Tungsten electrode

Say

- In TIG welding, only tungsten is used as electrode. Because of its excellent properties, it is an outstanding non-consumable electrode.
- For GTA welding, tungsten electrodes are classified as the following:
  - Zirconiated;
  - Ceriated;
  - Thoriated;
  - Tungsten;
  - Lanthanated
- Tungsten electrodes are available in different diameters from 0.5 to 8 mm. The most frequently used dimensions for TIG welding electrodes are 1.6 - 2.4 - 3.2 and 4 mm.

Elaborate

Preperation of tungsten

1. **Grinding of tungsten**

   A grinder is required for cleaning of contaminated tungsten and for sharpen the end point of tungsten. Use the grinder only for grinding the tungsten, not for any other purpose because particles of other metals may trapped and break the tungsten during grinding. Tungsten is very hard and brittleness, so during grinding, small particles of electrode blows away. Use of a coarse grinding stone can break electrode or give poor finish.

2. **Breaking and Remelting**

   Brittleness of tungsten results a low impact strength, so if it strucks roughly, it can break without making any bend. If it will hit against a sharp corner, it will break in a square shape. Using short scrap pieces of tungsten, pliers, wire cut¬ters, and a light machinist's hammer, you will break the end from the tungsten.

   When tungsten break into squar shape, then melt its end to make it in round shape. This canbe done by using DCEP polarity of current and by striking an arc on a copper piece with argon as shielding gas. Don't use carbon, because it contaminates tungsten.

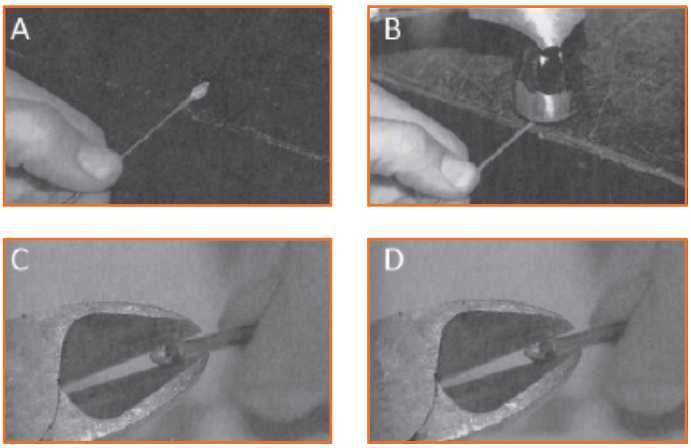

Fig 5.1.6: *Breaking and remelting of electrode*

3. **Chemical Cleaning and Pointing**

   Cleaning and pointing of tungsten can be done by following compounds.

   A. The tungsten is heated by shorting it against the work.

   B. The tungsten is then dipped in the compound, a strong alka¬line, which rapidly dissolves the hot tungsten. The chemi¬cal reaction is so fast that enough additional heat is pro¬duced to keep the tungsten hot.

   C. Taper the tungsten point, when it is cooled down and cleaned. Use chemical compound for cleaning, because it dissolves the tungsten and free the contamination to flow away.

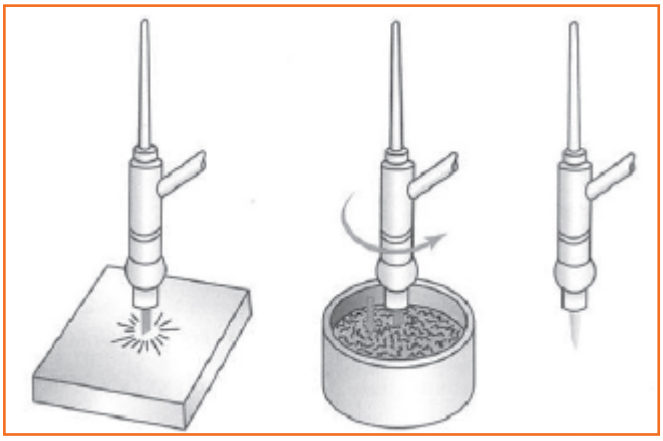

Fig 5.1.7: *Chemical cleaning of electrodes*

4. **Pointing and Remelting**

   Using a properly set up GTA welding machine, proper safety protection, one piece of copper or other clean piece of metal, and the tungsten, you will melt the end of the tungsten into the desired shape.

   1. First insert the tungsten in collet, set flow of argon gas, set the current polarity at DCEP and then switch on welding machine.
   2. Strike an arc on the copper and slowly increase the amperage.
   3. Watch the tungsten as it begins to melt, and stop the current when the desired shape has been obtained.

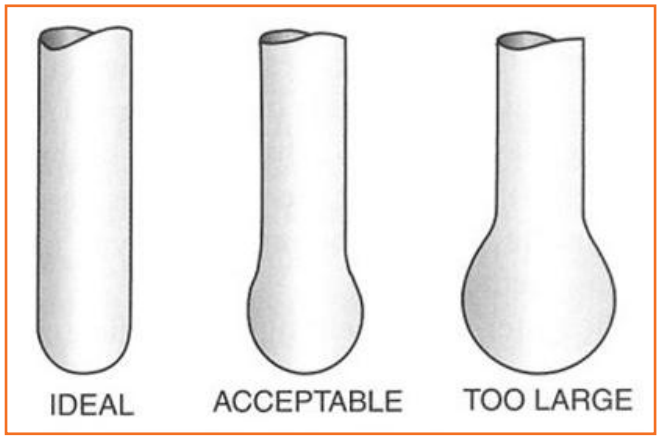

Fig 5.1.8: *Acceptable electrode tip*

Ask

- Ask what are the classification of tungsten electrode

Activity

- Conduct a skill practice activity.
- Ask the students to assemble together.
- Explain the purpose and duration of the activity.
- Set guidelines pertaining to discipline and expected tasks.

Skill Practice	Time	Resources
Preparation of tungsten	3 hours	Electrode
		Grinder etc.

Do

- Ask them to get into pairs for practice.
- Go around and make sure they are doing it properly.

Notes for Facilitation

- Summarize the main points.
- Ask participants if they have any doubts.
- Encourage them to ask questions.
- Answer their queries satisfactorily.

5.1.1.3: Shielding Gas

Say

- Shielding gas protects weld pool from any contamination by the air. The shielding gas makes path for the welding arc and gives support in starting the arc.
- Argon and helium are noble inert gases, so they cannot chemically combine with any other material. Because of there inert nature, they cannot affect the molten weld pool by any means.

Elaborate

Selection of shielding gas

Base Metal Type	Thickness Range	Weld Type	Shield Gas Type	Characteristics
Aluminium alloys and magnesium alloys	Thin	Manual	Pure Argon	Best starting of arc, penetration control, appearance on thin gauges.
	Thick	Manual	75% Ar – 25% He	Arc starting is good by argon, but increases heat input with faster welding speeds.
	General Purpose	Manual	Pure Argon	Best starting of arc, penetration control, appearance on thin gauges.
	Thin	Mechanised	50% Ar - 50% He	High weld speed under thickness of 20mm with good starting and stable arc.
	Thick	Mechanised	Pure Helium	High welding speed, deep penetration in DCSP polarity, good starting of arc and high flow rates.
Copper alloys, Cu-Ni alloys and Nickel alloys	Thin	Manual	Pure Argon	Best weld puddle making, bead contour and penetration on thin sheets.
	Thick	Manual	75% Ar - 25% He	Arc starting is good by argon, but increases heat input with faster welding speeds.
	General Purpose	Manual	75% Ar - 25% He	Arc starting is good by argon, but increases heat input with faster welding speeds.

	Thin	Mechanised	25% Ar - 75% He	High weld speed under thickness of 20mm with good starting and stable arc.
	Thick	Mechanised	Pure Helium	High welding speed, deep penetration in DCSP polarity, good starting of arc and high flow rates.
Low carbon alloys and steel alloys	Thin	Manual	Pure Argon	Best starting of arc, penetration control, appearance on thin gauges.
	Thick	Manual	75% Ar - 25% He	Arc starting is good by argon, but increases heat input with faster welding speeds.
	General Purpose	Manual	Pure Argon	Best starting of arc, penetration control, appearance on thin gauges.
	Thin	Mechanised	Pure Argon	Best starting of arc, penetration control, appearance on thin gauges.
	Thick	Mechanised	75% Ar - 25% He	Arc starting is good by argon, but increases heat input

Table 5.1.1: *Shielding gas selection parameters*

Ask

- Ask what are the parameters of selection of shielding gas

Notes for Facilitation

- Summarize the main points.
- Ask participants if they have any doubts.
- Encourage them to ask questions.
- Answer their queries satisfactorily.

5.1.1.4: TIG Torch

Say

- TIG torches come in different styles depending on the brand being selected. But they all have things in common –
  1. aircooled or
  2. watercooled
- Torches have several components like electrical lead, collet body, collets, and gas lens

Elaborate

The function of the TIG handpiece is to

1. It holds tungsten electrode.
2. It starts flow of welding current into the tungsten.
3. It delivers shielding gas to the torch nozzle.
4. It gives path for controlling the welding operation and amperage control.
5. Hoses of TIG torch lead supplies cooling water to torch head assembly, if TIG torch is water-cooled.
6. It maintains safe distance from power source and workpiece.

Fig 5.1.9: *TIG Torch*

TIG torches have a number of parts:

- Electrical leads for starting the welding machine.
- **Collet Body:** The collet body is another part of torch and screws inside the torch body.
- **Collet:** Collet is used to hold the tungsten electrode in the torch. Copper or copper alloys are used for making collets. For good current transfer, proper electrical contact is required between collet and electrode.
- **Gas lens:** A gas lens replaces the normal collet body. It produces undisturbed flow of shielding gas and reduces turbulence. It moves the nozzle away from the joint and increases arc visibility.

Ask

- Ask what are the components of TIG torch
- Ask the function of TIG handpiece

Notes for Facilitation

- Summarize the main points.
- Ask participants if they have any doubts.
- Encourage them to ask questions.
- Answer their queries satisfactorily.

5.1.1.5: Hoses

Say

- The hose assembly is connected with the welding current cable of shielding gas and power source cooling water pipes. Where current over 250 amps is used, then cooling water is required for cooling purpose. It also carries an additional cable, which is connected from control switch of torch to the power source.

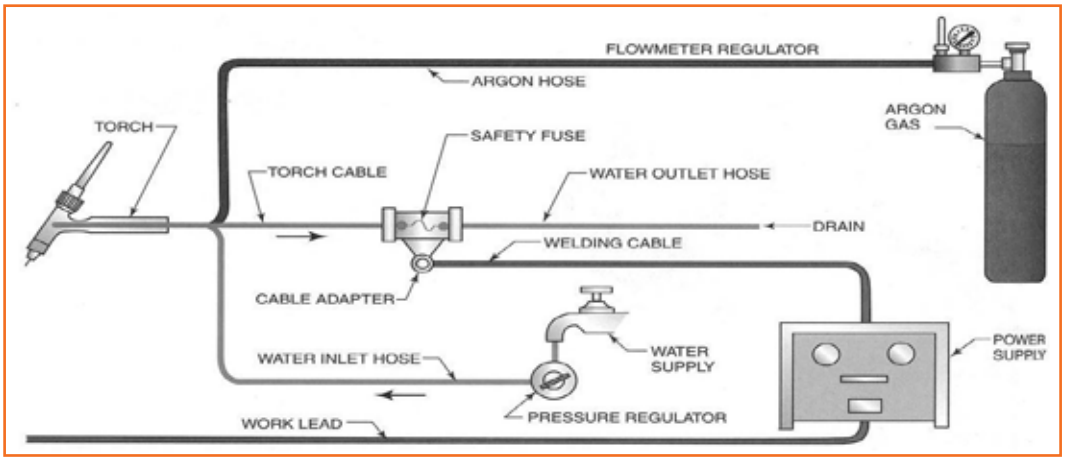

Fig 5.1.10: *Water cooled torch hose assembly*

- A water-cooled torch has three hoses connecting it to the welding machine. The hoses are for shielding gas to the torch, cooling water to the torch and cooling water return, and housing the power cables to the torch.

  Air-cooled torches may have one hose for shield¬ing gas attached to the power cable.

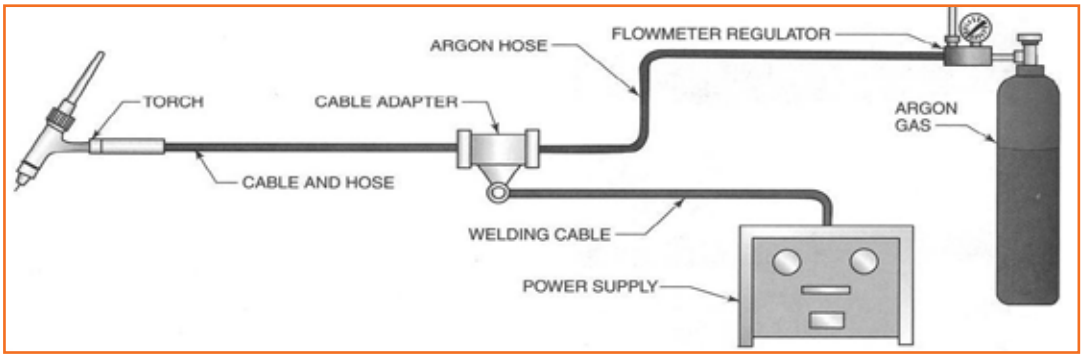

Fig 5.1.11: *Air cooled torch hose assembly*

Ask

- Ask what is the use of hose as component of TIG welding
- Ask to explain the water cooled and air cooled hose assembly

Notes for Facilitation

- Summarize the main points.
- Ask participants if they have any doubts.
- Encourage them to ask questions.
- Answer their queries satisfactorily.

5.1.1.6: Nozzles

Say

- Nozzle is utilized for giving direction to shield¬ing gas towards the welding zone. Size of nozzle size is selected on the basis of its diameter opening and length. They are made from ceramic like alumina or silicon nitride (opaque).
- Ceramic nozzles are heat resistant and offer a relatively long life.
- The longer a nozzle, the longer the tungsten must be extended from the collet.

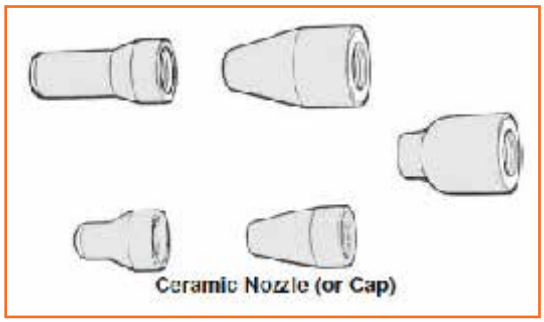

Fig 5.1.12: *Nozzle*

Elaborate

The useful life of a ceramic nozzle is aff ected by the current level and proximity to the work. Silicon nitride nozzles will withstand much more heat, resulting in a longer useful life.

The longer a nozzle, the longer the tungsten must be extended from the collet. This can cause higher tungsten temperatures, resulting in greater tungsten erosion. When using long nozzles, it is better to use low amperages or a larger-size tungsten.

Ask

- Ask about the concept of nozzle and its properties.

Notes for Facilitation

- Summarize the main points.
- Ask participants if they have any doubts.
- Encourage them to ask questions.
- Answer their queries satisfactorily.

5.1.1.7: Gas regulator or flow meter

Say

- Gas regulator reduces the pressure of gas to lower pressure and distribute it wit the constant flow.
- The amount of gas flow needed to do the job will depend on the welding job being done and the type of material being welded.

Elaborate

Three main styles of regulator are used in TIG welding:

- One style has single flow tube assembly.
- Second style has twin-flow tubes assembly.
- Third style does not have a flow tube, but the flow is set by turning a handwheel.

Lab

Show the different types of flow meters

Fig 5.1.13: *Different types of flow meter*

Ask

- Ask what are the function of gas regulator
- Ask the styles of regulator used for TIG

5.1.1.8: Remote control

Say

- A remote control is required for starting the weld. It increase or decrease the current and also stops the weld.
- The remote control can be either a foot-operated or hand-operated device. Foot operated remot control is better but where welding has to be done away from welding station, hand control device can be used.
- Remote control may have on-off switch for starting the control movement and when its pedal is pressed, variable resistor in it increases the current.

Fig 5.1.14: *Remote control*

Do

- Show the remote control to trainees
- Ask about the remote control

Notes for Facilitation

- Summarize the main points.
- Ask participants if they have any doubts.
- Encourage them to ask questions.
- Answer their queries satisfactorily.

5.1.1.9: Filler rods

Say

- For TIG welding, filler rods comes in cut lengths of 1 meter and of following diameters:
  - 1.6 mm
  - 2.4 mm
  - 3.2 mm
  - 4.8 mm
- Filler rods can be selected on the basis of parent metal has to be welded.
- Filler rods should be stored in clean dry conditions to prevent deterioration.
- After cleaning, filler rods should never be touched with bare hands. Wear clean, flexible soft leather or fire proofed cotton gloves.

Do

- Show the filler rod to participants
- Ask about the filler rod

Notes for Facilitation

- Summarize the main points.
- Ask participants if they have any doubts.
- Encourage them to ask questions.
- Answer their queries satisfactorily.

UNIT 5.2: Tools required

Unit Objectives

At the end of this unit, you will be able to:

1. Know about tools required during TIG welding
2. Know about use of tools

Resources to be used

- Invigilator can use the available objects such as a marker, duster, pen, notebook, participant manual etc.
- PC with LCD Projector or Flip Chart
- Tools like grinder, hammer, plier, spanner etc.

Say

- Grinding is used to get required precision of form and accuracy by removing excess material from the work-piece.
- There are several types of grinding machines used for off-hand grinding.
- A hammer is a tool meant to deliver an impact to an object. The most common uses for hammers are to drive nails, fit parts, forge metal and break apart objects.
- A clamp is a tool that is used for holding small work pieces together during assembly, marking, drilling, riveting etc. It is made for hardened steel.
- A clamp is a tool that is used for holding small work pieces together during assembly, marking, drilling, riveting etc. It is made for hardened steel.
- Plier is a hand tool that is used to hold objects firmly or for bending.
- The machinist's bench vise has rough jaws which prevent the work from slipping. It has a swivel base, allowing the user to position the vise in a better working position
- Steel wire brushes are tools used to finish different types of metals. Brushes are used to remove flaking paint, rust, scratches, dirt and small imperfections.
- In electrical and electronic engineering, a current clamp or current probe is an electrical device having two jaws which open to allow clamping around an electrical conductor.
- Spanner or wrench is a tool used to provide grip and mechanical advantage in applying rotational motion to turn objects like nuts and bolts.
- A wire stripper is a little, hand-held gadget used to strip the electrical insulation from electric wires.

Elaborate

1. Grinder

The machines may be:

1. **Pedestal Grinder**: A pedestal grinder comprises of a heavy base which holds the motor of grinder. It is generally utilized for action other than sharpening of tool, such as drill bits etc.

2. **Bench Grinder**: It is mounted on a bench and have wheels fitted to the end of the motor spindle.

Fig 5.2.1: *Bench grinder*

3. **Portable grinder**: Portable grinders are utilized where it is difficult to work by pedestal grinder. It is used by hand and passing it over the work. Portable grinders are once in a while utilized for device sharpening.

Fig 5.2.2: *Portable grinder*

2. Hammer

Classification of Hammers:

- **Ball peen hammer**- It is a general purpose hammer and consists of a face, peen, eye and handle. It comes in mass ranging from 55 g to 1400 g. The smaller sizes are used for layout work and the larger ones are used for general bench work.

- **Cross peen hammer-** Cross peen hammer is used for hammering inside curves for bending and stretching. These are also used for striking unhardened material as the peen allows for the shaping or bending of unhardened material.

- **Straight peen hammer-** The straight-peen hammer has the wedge oriented parallel to the hammer's handle. It is generally used for stretching of metal.

- **Soft hammer (Mallet)**- A mallet is a kind of hammer, often made of rubber or sometimes wood, they are usually made with a relatively large head.

Fig 5.2.3: *Types of hammer*

3. Clamp

A clamp is a tool that is used for holding small work pieces together during assembly, marking, drilling, riveting etc. It is made for hardened steel.

Toolmaker's Clamp: It has two jaws, upper and lower, between which the work piece is held. A clip is screwed to the top jaw to prevent the jaws from falling while being adjusted. The jaws of the clamp are assembled by means of two threaded rods. It is to be noted that a toolmaker's clamp is not suitable for heavy jobs and should only be used for holding light jobs.

Fig 5.2.4: *Clamp*

4. Plier

Types of pliers

- **Side cutting pliers**: Side cutting pliers have two jaws with cutting edges to cut soft wires. These are useful in cutting copper, brass, aluminium and steel wires.

Fig 5.2.5: *Side cutting plier*

- **Flat nose pliers**: These pliers have tapered wedge jaws with flat gripping surface. These are used for folding narrow strips of thin sheets and also for making sharp bends and right angles in a wire.

Fig 5.2.6: *Flat nose plier*

- **Round nose pliers**: Round nose pliers consist of tapered round shaped jaws which are used to shape loops in wires and to form curves in light metal strips.

Fig 5.2.7: *Round nose plier*

5. Bench vise

The machinist's bench vise has harsh jaws which keep the work from slipping. It has a swivel base, enabling the user to position the vise in a superior working position. Machinist's bench vises are normally rushed to a work seat or table. They are utilized for holding or clamping substantial, overwhelming items.

Fig 5.2.8: *Bench vise*

6. Wire brush

Steel wire brushes are instruments used to finish diverse sorts of metals. Brushes are utilized to evacuate flaking paint, rust, scratches, dirt and little blemishes. They are utilized on solid, metal, stone and wood surfaces. Wire brush connections are made for drills, grinders and different sorts of fabrication tools.

Fig 5.2.9: *Wire brush*

7. Tong tester

In electrical and electronic engineering, a current clasp or current probe is an electrical gadget having two jaws which open to permit clamping around an electrical conduit. This permits properties of the electric current in the conduit to be calculated, without making any physical contact with it, or to separate it for insertion through the probe.

Fig 5.2.10: *Tong tester*

8. Spanners

1. **Single Ended Spanner:** A single ended spanner has opening at only one end and fits only one size of bolt, head or nut.

Fig 5.2.11: *Open end Spanner*

2. **Double Ended Spanner:** A double ended spanner has different sized opening at each end.

3. **Adjustable Spanners:** Sometimes called adjustable wrenches or Shifters. Most common types of adjustable spanners are similar to open end spanners, but they have one moveable jaw

Fig 5.2.12: *Adjustable Spanner*

Do

While using a spanner, keep following things in mind:

- Select a spanner which fits the nut or bolt properly
- The application of force should be by pulling the spanner rather than pushing it
- Before applying force, make sure that the nut is fully seated in the spanner jaw

Demonstrate

Grinding machines operation: Grinders - Pre-operation Checklist

Steps

Grinding machines operation: Grinders - Pre-operation Checklist

Step1: Always wear eye safeguard. (Protection glasses beneath a face shield).

Step2: Remove ties, rings, watches and other gems. Long hair ought to be tied back and free sleeves ought not to be worn. Try not to wear gloves while using a buffing, granulating or cleaning wheel.

Step3: Make beyond any doubt the wheel guards are set up and appropriately balanced and fixed.

Step4: Don't alter a grinder when it is in operation.

Step5: Blotter and wheel flanges employed to mount the grinding wheels onto the shaft of the grinder must be set up.

Step6: Tool rests must be balanced and fixed to guarantee that there is not as much as a 1/8-inch gap from the wheel.

Step7: Wheels ought to be assessed before turning on the power. Wheels with splits or chips or that are gravely rutted ought not to be utilized.

Operation

Step1: Stand to the other side of the wheel when turning on the power.

Step2: Before beginning grinding, permit the grinding wheel to keep running at working rate for no less than one minute.

Step3: When starting a grinding operation, carry the object into contact with the grinding wheel gradually and easily maintaining a strategic distance from affect or knocking movements.

Step4: Move the object being ground forward and backward over the face of the wheel as this keeps away trenches or grooves from shaping.

Step5: Utilize the face of the wheel at the time of grinding. Try not to press too hard on the wheel.

Step6: Vibrating wheels ought not to be utilized. They should be dressed or supplanted or the bearings of the shaft supplanted on the off chance if they are worn.

Step7: Do not touch the ground bit of the workpiece until the point when you are certain that it is cool.

Step8: Shut off the power and don't leave until the point that the wheel has arrived at a total stop.

Step9: Clean the work area when wrapped up utilizing the grinder.

Ask

- You could ask about the following tools required for TIG welding
  1. Grinder
  2. Hammer
  3. Clamps
  4. Pliers
  5. Vice
  6. Wire brush
  7. Tong tester
  8. spanner

Activity

- Conduct a skill practice activity.
- Ask the students to assemble together.
- Explain the purpose and duration of the activity.
- Set guidelines pertaining to discipline and expected tasks.

Skill Practice	Time	Resources
Using hand tools	2 hours	Grinder Spanner Plier Clamp Wire brush Tong tester Hammer

Do

- Ask them to get practice the activity alone.
- Go around and make sure they are doing it properly.

Notes for Facilitation

- Summarize the main points.
- Ask participants if they have any doubts.
- Encourage them to ask questions.
- Answer their queries satisfactorily.

UNIT 5.3: Measuring instruments required

Unit Objectives

At the end of this unit, you will be able to:

1. Discuss about different measuring instruments
2. Know about how to use measuring instruments properly

Resources to be Used

- Available objects such as a duster, pen, notebook, measuring instruments etc.

Ask

- You could ask the definition of Unit
- You could ask the body parts of a micrometer
- You could ask the different types of rules available
- You could ask the concept of vernier caliper

Notes for Facilitation

- You could ask about the SI unit of different physical quantities like length, mass, time etc
- You could ask how can the accuracy of a spirit level can be checked

5.3.1: Measuring instruments

Say

- A measuring instrument is a gadget for measuring a physical amount. In the physical sciences, quality confirmation and engineering, estimation is the movement of getting and contrasting physical amounts of certifiable items and events.
- Measuring instruments are classified into types:
  - Precision instruments and
  - Non Precision instruments
- Least Count shows the level of precision of estimation that can be accomplished by the measuring instrument.

Do

- Show different precision and non-precision instruments.
- Give the example of least count calculation.

Ask

- You could ask about precision instruments
- Ask about non-precision instruments

Elaborate

A measuring instrument is a gadget for measuring a physical amount. In the physical sciences, quality confirmation and engineering, estimation is the movement of getting and contrasting physical amounts of certifiable items and events. Set up standard articles and events are utilized as units, and the procedure of estimation gives a number relating the thing under review and the referenced unit of estimation. Measuring instruments, and formal test strategies which characterize the instrument's utilization, are the methods by which these relations of numbers are gotten. All measuring instruments are liable to shifting degrees of instrument mistake and estimation vulnerability.

5.3.1.1: Steel rule

Say

- Steel Rule is a flat and thin linear measurement instrument. It is the most commonly used measuring instrument.
- There are different types of rules available. Few commonly used are: Engineer's rule, Folding rule,
  - Flexible rule & Hook rule

Do

- Show different steel rules
- Demonstrate the use of steel rule

Elaborate

Steel Rule is a flat and thin linear measurement instrument. It is the most commonly used measuring instrument. Steel rule is manufactured from stainless steel. The edges of the rule are accurately ground to form straight edges. Steel rules are available in different sizes like 150 mm, 300 mm and 600 mm. usually; the reading accuracy is around 0.5 mm.

Fig 5.3.1: *Steel rule*

5.3.1.2: Vernier caliper

Say

- A Vernier Caliper is a precision measuring instrument used to measure inside and outside diameter of shafts and thickness of parts having accuracy of 0.02mm.
- The vernier calipers measure reading of the distance directly with precision and high accuracy. These calipers consist of calibrated scale with fixed jaw and movable jaw with a pointer.
- The Least Count of a Vernier Caliper can be calculated using the formula LC = 1 MSD - 1 VSD (Value of one Main Scale Division - Value of one Vernier Scale Division).

Do

- Show vernier caliper.
- Show the parts of vernier caliper.
- Demonstrate how to take the reading from vernier caliper.

Elaborate

For using vernier caliper, move the position of the pointer on the scale. At the point where the pointer is between two markings, take the reading on the scale. This is basic caliper; expansion of vernier scale on the instrument gives more exact reading; this is the vernier caliper.

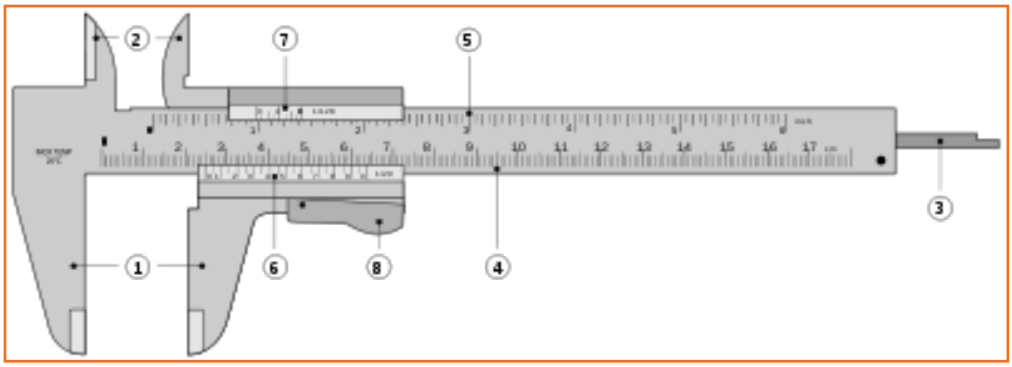

Fig 5.3.2: *Vernier caliper*

Parts of a vernier caliper:

1. **Outside Jaw -** To measure outer dia. and width of an object.
2. **Inside Jaw -** To measure inner dia.
3. **Depth Probe -** To measure depth of an object.

4. **Main Scale -** Scale set apart in millimeter (mm)
5. **Main Scale -** Scale set apart in inches
6. **Vernier Scale -** Interpolated estimations in millimeter
7. **Vernier Scale -** Interpolated estimations in millimeter
8. **Retainer -** Used to lock movable parts

Demonstrate

- Explain the parts of vernier caliper.
- Demonstrate how to do measurement from vernier caliper

Steps: Using vernier caliper

STEP 1: First loose the locking screw of caliper and check the vernier scale for its proper working by moving the slider and ensure that caliper is reading 0 when closed fully. If you find caliper is not showing 0 reading, then adjust the jaws of caliper till that you get a 0 reading. If it is not adjusting at 0 reading, then add or subtract the correct offset in final reading for getting 0 reading.

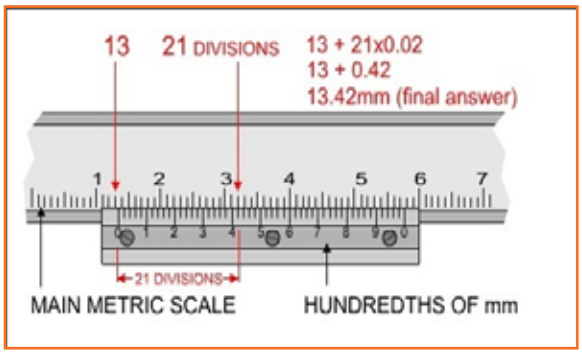

Fig 5.3.3: *Vernier Scale*

STEP 2: Close the jaws delicately on the object which need to be quantify (For instance a round steel ball).

STEP 3: The primary metric scale is perused first and for instance says this demonstrates there are 13 entire divisions before the 0 on the hundredths scale. Thusly, the main number is 13.

STEP 4: The 'hundredths of mm' scale is then perused. The most ideal approach to do this is to tally the quantity of divisions. This is 21 divisions on the hundredths scale.

STEP 5: Then 21 is multiplied by 0.02 giving 0.42 as the appropriate response (every division on the hundredths scale is comparable to 0.02mm).

STEP 6: The 13 and the 0.42 are included to give the last estimation of 13.42mm (the diameter across of the bit of round area steel).

Activity

- Conduct a skill practice activity.
- Ask the students to assemble together.
- Explain the purpose and duration of the activity.

- Set guidelines pertaining to discipline and expected tasks.
- Do the measurement of given object by using vernier caliper

Skill Practice	Time	Resources
Using vernier caliper	2 hours	Vernier caliper
		Any object for measurement

Do

- Ask them to get practice the activity alone.
- Go around and make sure they are doing it properly.
- Wrap the unit up after summarizing the key points and answering questions.

5.3.1.3: Micrometer

Say

- A micrometer is a gadget assimilating an aligned screw broadly utilized for exact estimation of segment in mechanical trades and machining.
- Micrometers utilize the rule of a screw to expand little separations (that are too little to measure normally) into big rotation of the screw that are sufficiently enormous to read from a scale.
- Explain the body parts of a micrometer.

Do

- Show micrometer.
- Show the parts of micrometer.
- Demonstrate how to take the reading from micrometer.

Elaborate

A micrometer is a device incorporating a calibrated screw widely used for precise measurement of component in mechanical engineering and machining as well as most mechanical trades. They are used to measure very small distances.

Body parts of a Micrometer

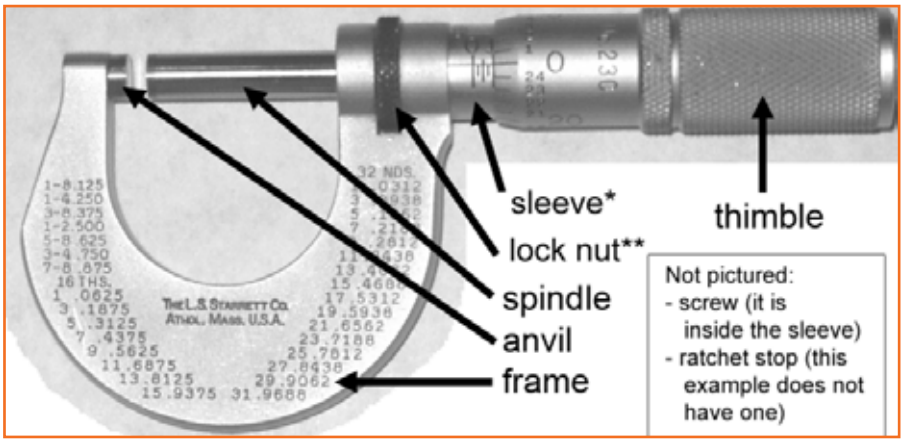

Fig 5.3.4: *Micrometer*

- **Frame -** The C-formed part that clasp the anvil and barrel in steady connection to each other. It is thick since it needs to limit flexion, magnification, and compression, which can misinterpret the estimation.
- **Anvil -** The gleaming part that the spindle pushes toward, and that the model leans against.
- **Sleeve / barrel / stock -** The stationary cylindrical part with the straight scale on it.
- **Lock nut / lock-ring / thimble lock -** The rough part (or lever) that one can fix to hold the spindle stagnant, for example, when instantly holding a measurement.
- **Screw –** It is the main part of instrument, stays inside the barrel.
- **Spindle -** The gleaming round part which pushes the thimble towards anvil.
- **Thimble –** This part turns by the thumb
- **Ratchet stop -** Applied pressure can be limited by the device in the end of the handle by slipping at an aligned torque.

Demonstrate

- Explain the parts of micrometer.
- Demonstrate how to do measurement from micrometer.

Steps: Using Micrometer

The fundamental working standards of a micrometer are as per the following:

STEP 1: The measure of turn of a precisely made screw can be directly associated to a specific measure of axial movement (and the other way around), through the steady known as the screw's lead. A screw's lead is the distance it moves ahead axially with one entire turn (360°).

STEP 2: With a fitting lead and real diameter of the screw, a given measure of axial movement will be intensified in the consequential circumferential movements.

Activity

- Conduct a skill practice activity.
- Ask the students to assemble together.
- Explain the purpose and duration of the activity.
- Set guidelines pertaining to discipline and expected tasks.
- Do the measurement of given object by using micrometer

Skill Practice	Time	Resources
Using micrometer	2 hours	Micrometer
		Any object for measurement

Do

- Ask them to get practice the activity alone.
- Go around and make sure they are doing it properly.
- Wrap the unit up after summarizing the key points and answering questions.

Notes

Skill India
कौशल भारत-कुशल भारत

सत्यमेव जयते
GOVERNMENT OF INDIA
MINISTRY OF SKILL DEVELOPMENT
& ENTREPRENEURSHIP

N·S·D·C
National
Skill Development
Corporation
Transforming the skill landscape

6. TIG welding setup and Operation

Unit 6.1 – TIG welding operating parameters

Unit 6.2 – TIG welding setup and operation

Unit 6.3 – Welding practice

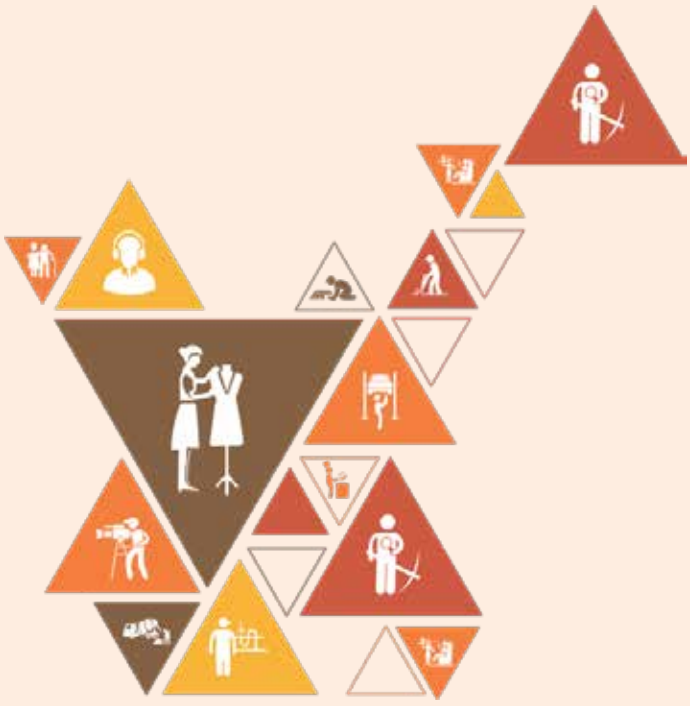

CSC/N0141

Key Learning Outcomes

At the end of this module, students will be able to:

1. Know about operating parameters of TIG welding
2. Know about striking welding arc
3. Know about current setting procedure
4. Know about gas flow setting procedure
5. Know about setup of TIG welding
6. Know about operating procedure of TIG welding

UNIT 6.1: TIG welding operating parameters

Unit Objectives

At the end of this unit, you will be able to:

1. Know about different operating parameters of TIG welding
2. Know about different settings required for TIG welding

Resources to be used

- Invigilator can use the available objects such as a marker, duster, pen, notebook, participant manual etc.
- PC with LCD Projector or Flip Chart
- TIG welding equipments etc.

Do

- Welcome and greet the participants. Revise the learnings of the previous sessions and ask them if they have any doubts.

Say

- Prepurge is the time duration in which flow of gas initiated for clearing out filled air in the nozzle.
- Postpurge is the time duration in which flow of gas con¬tinues after the welding current has stopped.
- The flow rate of shielding gas can be measured in cubic feet/hour (CFH) or as litres/minute (L/min).
- The velocity of the shielding gas also affects the protective zone as the torch angle changes.
- The filler rod end must be kept inside the protective zone of the shielding gas.
- The rod should enter the shielding gas as close to the base metal as possible
- The tungsten becomes contaminated when it touches the molten weld pool or when it is touched by the filler metal.
- The amperage set on a machine and the actual welding current are often not the same.
- The welding machine setting will vary within a range from low to high (cool to hot). The range for one machine may be different from that of another machine.

Elaborate

Gas flow rate

The flow rate of shielding gas can be measured in cubic feet/hour (CFH) or as litres/minute (L/min). Flow rate needs to be keep very low, because at high flow rates of gas, shielding gases get wasted and due to turbulence contamina¬tion causes. Gas envelope draws the air around the nozzle edge due to venturi effect.

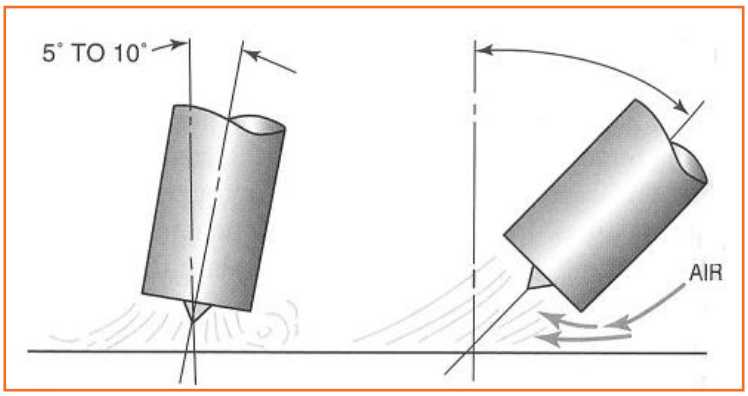

Fig 6.1.1: *Torch angle*

Torch and rod positioning

For welding a bead on plate, keep the electrode and welding rod at some angle. When making butt wled, you can use same angles for wleding bead. Hold the torch with metal surface at 60o to 75o angle, which is simailar to holding the torch vertically at 15o - 30o angle.

Filler Rod Manipulation

The end of the filler rod is hot, and if it is removed from the gas protection, it will oxidize rapidly. The oxide will then be added to the molten weld pool. When a weld is stopped so that the welder can change position, the shielding gas must be kept flowing around the rod end to protect it until it is cool.

If the end of the rod becomes oxidized, it should be cut off before restarting. The following method can be used both to protect the rod end and reduce the possibility of crater cracking-that is, breaking the arc but keeping the torch over the crater while, at the same time, sticking the rod in the molten weld pool before it cools.

Tungsten Contamination

Tungsten becomes contaminated when it touches the molten weld pool or when it is touched by the filler metal. When this happens, especially with alu¬minium, surface tension pulls the contamination up onto the hot tungsten. The extreme heat causes some of the metal to vaporize and form a large, widely scattered oxide layer.

The contamination caused by the tungsten touching the molten weld pool or filler metal forms a weak weld. On a welding job, both the weld and the tungsten must be cleaned before any more welding can be done

Current Setting

The amperage set on a machine and the actual welding current are often not the same. The amperage indicated on the machine's control is the same as that at the arc only for the following conditions:

- The power to the machine is exactly correct.
- The lead length is very short.
- All cable connections are perfect with zero resistance.
- The arc length is exactly the right length.

If anyone of these factors changes, the actual welding amperage will change.

Demonstrate

- Demonstrate the torch position

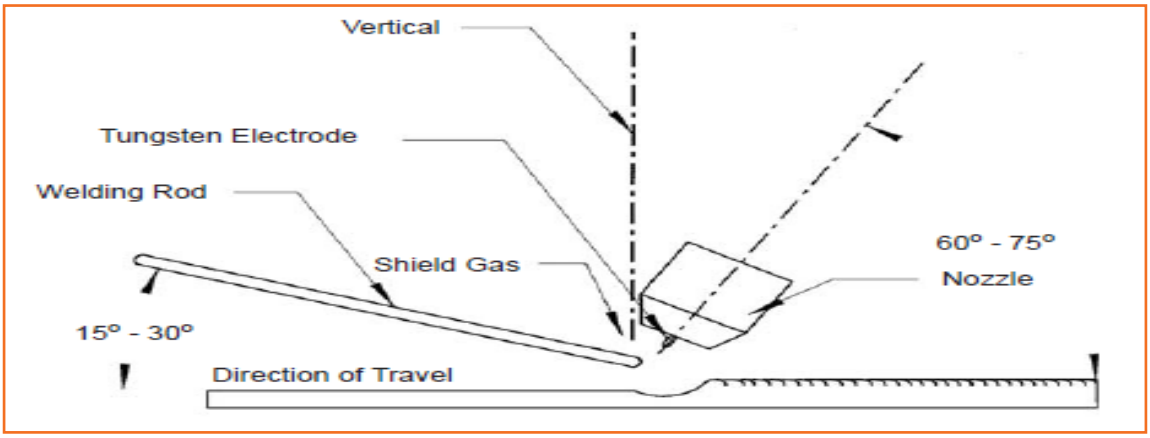

Fig 6.1.2: *Torch position*

Ask

- You could ask the important operating parameters of TIG welding
- You could ask the conditions of the amperage indicated on the machine's control is the same as that at the arc.

Notes for Facilitation

- Summarize the main points.
- Ask participants if they have any doubts.
- Encourage them to ask questions.
- Answer their queries satisfactorily.

UNIT 6.2: TIG welding setup and operation

Unit Objectives

At the end of this unit, you will be able to:

1. Know about task preparation and setting for a welding
2. Know about how to strike welding arc
3. Know about steps of TIG operation

Resources to be used

- Invigilator can use the available objects such as a marker, duster, pen, notebook, participant manual etc.
- PC with LCD Projector or Flip Chart
- TIG welding equipments etc.

Do

- Welcome and greet the participants. Revise the learnings of the previous sessions and ask them if they have any doubts.

Say

- GTAW setup requires following equipments: GTAW machine, welding torch, torch nozzle, cap, collet and collet body, remote control, flowmeters, gas cylinders and hoses, tungsten electrodes and tools.
- Use a properly set up GTA welding machine, proper protection, and clean scrap metal, you will strike a GT A welding arc.
- Use a properly set up GTA welding machine and torch, proper safety protection, one of each available tungsten size and type, and 16-gauge mild steel 1/8 in (3 mm) and 1/4 in. (6 mm) thick.

Demonstrate

Setting up a TIG welding machine

Step1: Switch on the power. Attach torch hose with machine by using wrench. Tight the fittings and ensure that there should not ba any leaks. Attach cooling water with the inlet of machine solenoid and power block with water out.

Step2: Now attach the flowmeter. Secure the gas cylinder with a safety chain and remove the valve cap of cylinder.

Step3: Connect gas hoses from flowmeter to gas inlet of machine.

Step4: Switch off the machine power and check the water and gas connection for any leakage with the machine. If found any leak, tight the fittings.

Step5: Now turn on the machine and check torch hoses and fittings for leak.

Step6: Now switch the machine to welding mode.

Step7: Set required range of current and amperage.

Step8: Adjust appropriate range of current according to the tungsten size used.

Step9: Move high-frequency switch, which has to be set at auto (HF start) for DC or continuous for AC.

Step10: Plugged in the selector switch and remote control.

Step11: Install collet and collet body on the torch.

Step12: In torch, first install the back cap and then fully screw the collet body into the torch. Bad connection can cause too much thermal and electrical resistance, which in turn build up heat in the head.

Step13: Install tungsten electrode and tight the end cap for holding the electrode in place properly.

Step14: Install nozzle of required size. Adjust length of tungsten electrode so that it does not stick on the workpiece.

Step15: See manufacturer's operating manual to ensure that setup and connections are correct.

Step16: Turn on machine power, press remote control pedal and check for leakage again.

Step17: During the postpurge, adjust the flowmeter valve for setting the flow of gas.

Striking welding arc

Step1: Position yourself and see the torch, tungsten and plate while the tungsten tip is held about 6 mm above the metal. Try to hold the torch at a vertical angle ranging from 0° to 15°. Too steep an angle will not give adequate gas coverage.

Step2: Lower arc welding helmet and depress the remote control. A high-pitched, erratic arc should be immediately jumping across the gap between the tungsten and the plate.

Step3: Slowly increase the current until the welding arc appears.

Step4: Observe the colour change of the tungsten as the arc appears.

Step5: Move the tungsten around in a small circle until a molten weld pool appears on the metal.

Step6: Slowly decrease the current and observe the change in the molten weld pool.

Step7: Reduce the current until the arc is extinguished.

Step8: Hold the torch in place over the weld until the postpurge stops.

Step9: Raise your hood and inspect the weld.

Setting the welding current

Step1: Set the machine welding power switch for DCEN (DCSP) and the amperage control to its lowest setting.

Step2: Sharpen a point on each tungsten and install one of the smaller diameter tungstens in the GTA torch.

Step3: Select a nozzle with a 13 mm -diameter hole and attach it to the torch head.

Step4: Set the prepurge time to 0 and postpurge to 10 to 15 seconds.

Step5: Connect the remote con¬trol if it is available.

Step6: Turn on the main power and hold the torch so that it cannot short out.

Step7: Depress the remote con¬trols to start the shielding gas so the flow rate can be set at 8 L/min.

Setting gas flow

Step1: Set the machine welding power switch for DCEN (DCSP).

Step2: Set the amperage to the lowest setting for the size of tungsten used.

Step3: Set the prepurge time to 0 and postpurge at 20 seconds.

Step4: Turn on the main power. Depress the remote control to start the shielding gas flow and set the flow at 20 CFH (9 L/min).

Step5: Switch the high frequency to start.

Step6: Starting with the smallest nozzle and tungsten size, strike an arc and establish a molten pool on a piece of metal in the flat position.

Step7: Watch the molten weld pool and tungsten for signs of oxide formation as another person slowly lowers the gas flow rate.

Step8: Slowly increase the flow rate until the molten pool starts to be blown back or oxides start forming.

Step9: Lower the flow to a rate of 1 L/min or 2 L/min above the minimum value noted on the chart and then stop the arc. Record the length of time from the point when the arc stops and the tungsten stops glowing as the postpurge time. Repeat this test at a medium and then high current setting for this nozzle and tungsten size.

Step10: Repeat this test procedure with each available nozzle and tungsten size.

Step11: Turn off the welding machine, shield¬ing gas and cooling water and clean up work area when finished welding.

Performing TIG welding operation

Step1: Wear safety equipments.

Step2: Connect TIG torch.

Step3: Plug remote control or foot pedal into machine.

Step4: Select polarity.

Step5: Grind the Tungsten.

Step6: Gas flow setup. Argon or mixture of an argon-helium is used during GTAW.

- Remove protective cap of cylinder.
- Clean any dust or debris out of the valve body by quickly opens and close the valve.
- Tight the regulator screw and twist the regulator till that it gets fit in the valve.
- Ensure that pressure knob of regulator is in counter-clockwise direction.
- Connect gas hose and flowmeter and then turn on the cylinder valve. Turn cylinder valve very smoothly and slowly.
- Check the setup for any leaks.
- Adjust the cylinder regulator and set the gas flow rate as required.

Step7: Amperage setting. The amperage regulates the control over welding process.

- If metal is thick, set the amperage higher.
- Amperage can be generated high, if depression of foot pedal is proper and more
- Few usual current ratios utilized are: 1.6mm and 30 to 120 amps; 2.4mm and 80 to 240 amps; 3.2mm and 200 to 380 amps.

Welding of metal

Step1: Cleaning of welding material

Step2: Insertion of tungsten electrode into collet.

Step3: Clamp of parts together.

Step4: Tack weld of parts together.

Step5: Hold the TIG torch in hand.

Step6: Use foot pedals for controlling the heat.

Step7: Holding filler rod in other hand.

Step8: Heat up the base metal by torch.

Step9: Move metal puddle in required direction by torch arc.

Do's and Don'ts

- Do not use Argon mixed with CO_2 as your shielding gas. CO_2 is an active gas and will destroy the tungsten electrode.
- Protect your face with a welding helmet that has a proper shade with filter lenses.
- Wear dry insulating gloves before turning on the welding machine.
- Wear safety glasses with side shields under your helmet shade.
- Wear durable, flame-resistant clothing and footwear when operating a welding machine.

Tips

- TIG welds can be made in all positions, including flat, horizontal, and overhead.
- If your metal is clean, no sparks will be produced as you weld.
- The secret of TIG welding lies mostly in getting the weld pool to form simultaneously on both pieces of metal.
- No smoke or fumes should be produced as a result of TIG welding. If smoke or fumes occur, you may need to clean the metal more thoroughly.
- No flux is used in TIG welding and there is no slag to block your view of the weld puddle.
- As the gas tank nears its end, you will want to raise the flow rate because the mix of gases is not as pure at the bottom of the tank.

Ask

- You could ask the different types of weld.
- You could ask about the tips of TIG welding.
- You could ask what are the warnings under the TIG welding operation

Activity

- Conduct a skill practice activity.
- Ask the students to assemble together.
- Explain the purpose and duration of the activity.
- Set guidelines pertaining to discipline and expected tasks.

Skill Practice	Time	Resources
Performing TIG welding operation	2 hours	TIG welding equipment

Do

- Ask them to get into pairs for practice.
- Go around and make sure they are doing it properly.

Notes for Facilitation

- Summarize the main points.
- Ask participants if they have any doubts.
- Encourage them to ask questions.
- Answer their queries satisfactorily.

UNIT 6.3: Welding practice

Unit Objectives

At the end of this unit, students will be able to:

1. Practicing welding positions

Resources to be used

- Available objects such as a duster, pen, notebook, TIG welding machine and workpiece etc.

Do

- Welcome and greet the participants. Revise the learnings of the previous sessions and ask them if they have any doubts.

Demonstrate

Practice 1: Stringer Beads, Flat Position on Mild Steel

- Start welding from one end of the workpiece and hold the torch at a 90° angle near to the workpiece.
- Lower your hood, strike an arc, and establish a weld pool.
- Move the torch in a circular oscillation pattern down the plate toward the other end.
- If size of molten puddle starts changing, slow down or speed up the travel rate of torch to keep puddle size same throughout the plate length.

Practice 2: Stringer Beads, Flat Position on Aluminium

- Use one or more pieces of alu¬minium 150 mm long and 2 mm, 3 mm, and 6 mm thick, you will push a weld pool in a straight line, maintaining uniform width and penetration for the length of the plate.
- A high current setting will allow faster travel speeds. The faster speed helps control excessive penetration.
- Repeat the process using all thicknesses of metal until you can consistently make the weld visually defect free.

Practice 3: Flat Position, using mild steel aluminium

- Use adjusted GTA welding machine, proper safety protection, filler rods 0.9 m long X 2 mm, 2.4 mm, and 3 mm in diameter, one or more pieces of mild steel, stainless steel, and aluminium, 6 in. 150 mm long X 2 mm and 3 mm thick, and aluminium plate 6 mm thick.
- Start with the metal that is 3 mm thick and the filler rod having a 2.4-mm diameter strike an arc and establish a weld pool. Move the torch in a circle as in the practice beading.
- Maintain a smooth and uniform rhythm as filler metal is added. If the rod sticks, move the torch toward the rod until it melts free.
- When the full 150-mm - long weld bead is com¬pleted, cool and inspect it for uniformity and defects. Repeat the process using all thicknesses of metal until you can con¬sistently make the weld visually defect free.

Do

- Take the trainees in workshop.
- Divide them into groups.
- Provide GTAW machines, accessories and workpiece to them.
- Allow them to do the practice of welding in workshop.

Notes for Facilitation

- Summarize the main points.
- Ask participants if they have any doubts.
- Encourage them to ask questions.
- Answer their queries satisfactorily.

Skill India
कौशल भारत-कुशल भारत

सत्यमेव जयते
GOVERNMENT OF INDIA
MINISTRY OF SKILL DEVELOPMENT
& ENTREPRENEURSHIP

N·S·D·C
National Skill Development Corporation
Transforming the skill landscape

INDIAN IRON & STEEL SECTOR SKILL COUNCIL

7. Welding quality and defects inspection

Unit 7.1 – Welding quality and defects

Unit 7.2 – Quality and inspection tests

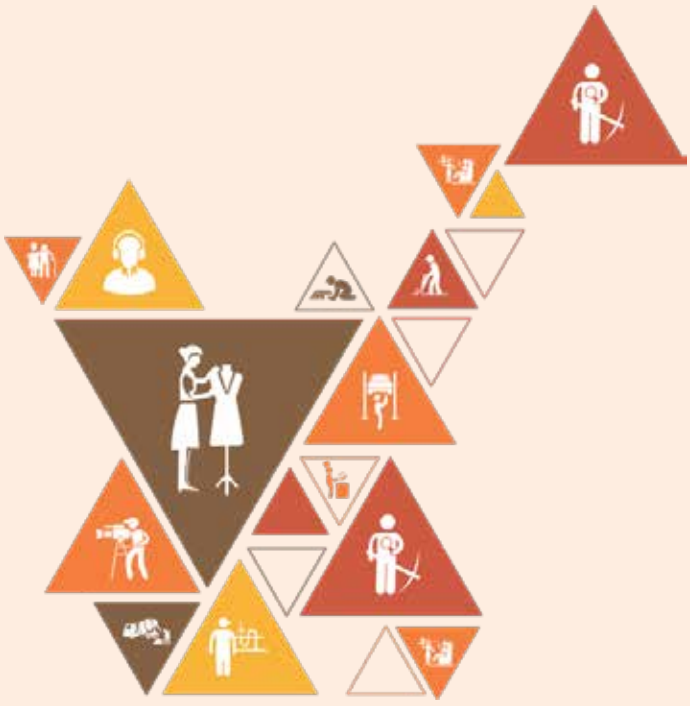

CSC/N0141

Key Learning Outcomes

At the end of this module, students will be able to:

1. Know about weld quality problems
2. Know about welding defects
3. Know about preventive measures for reducing defects
4. Know about quality and inspection tests
5. Know about welding gages

UNIT 7.1: Welding Quality and defects

Unit Objectives

At the end of this unit, you will be able to:

1. Know about arc welding quality reasons
2. Know about welding defects and their preventive measures

Resources to be used

- Invigilator can use the available objects such as a marker, duster, pen, notebook, participant manual etc.
- PC with LCD Projector or Flip Chart
- Weld gauges etc.

Do

- Welcome and greet the participants. Revise the learnings of the previous sessions and ask them if they have any doubts.

Notes for Facilitation

- Explain about arc welding quality reasons and welding defects.
- Invite students to participate. List the responses from students on the whiteboard.
- Give the students a brief overview of what all will be covered in the program.

7.1.1: Quality

Say

- The most common quality problems associated with welding include:
  - weld spatter,
  - Porosity,
  - Poor fusion,
  - Shallow penetration
  - And cracking

Elaborate

- **Weld spatter**, while not affecting the integrity of the weld, damages its appearance and increases cleaning costs. This is created by exorbitantly high current, arc blow or a long arc, a situation linked with straight current exposed by the electric arc being transmitted distant from the weld pool by magnetic strength.

Fig. 7.1.1: *Weld spatter*

- **Porosity**, often not visible without the use of advanced non-destructive testing methods, is a serious concern because it can potentially weaken the weld. It is normally not visible without the use of cutting edge non-dangerous testing techniques.

Fig. 7.1.2: *Porosity*

- **Shallow penetration**, is one more damage to weld quality, can be tended to by diminishing welding rapidity, expanding the current or utilizing a minor electrode.

Ask

- You could ask the common quality problems associated with welding

7.1.2: Welding defects

Say

- A welding defect is any flaw that compromises the usefulness of a weldment.
- Welding defects must be evaluated in the light of the relevant specifications and standards.
- Common weld defects include: cracks, distortion, gas inclusion, inclusions, lack of fusion and incomplete penetration and undercut

Elaborate

Common weld defects include:

1. **Cracks**: This is a genuine welding defect which shows up as crack sort interference in the weld. It works in as a state of stress focus so decrease the quality of the joint. Cracks are further classified into following types: Arc strike cracking, Cold cracking, Crater crack, Hat crack, Hot cracking, underbead crack, Longitudinal crack, Reheat cracking, Root and toe cracks and Transverse crack.

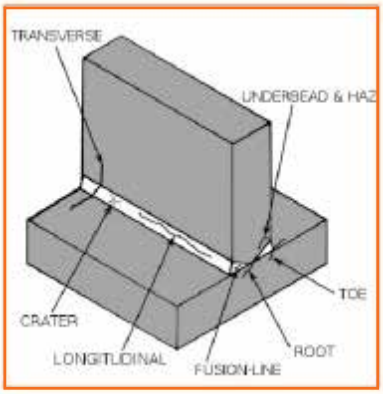

Fig. 7.1.3: *Cracks*

2. **Distortion** - This is a genuine welding defect which shows up as crack sort interference in the weld. It works in as a state of stress focus so decrease the quality of the joint. Cracks are further classified into following types: Arc strike cracking, Cold cracking, Crater crack, Hat crack, Hot cracking, underbead crack, Longitudinal crack, Reheat cracking, Root and toe cracks and Transverse crack.

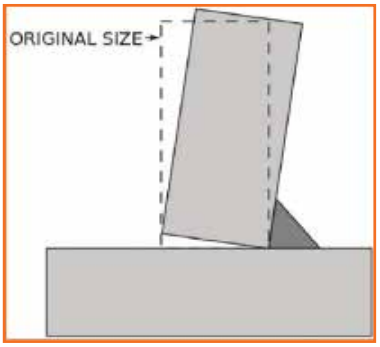

Fig. 7.1.4: *Distortion*

3. **Gas inclusion** - The capture of gas inside the cemented weld underlying reason for gas considerations. Unnecessary dampness from the electrode or workpiece, high sulfur content in the workpiece or electrode, too short of an arc, or incorrect welding current or division are the regions by which gas can be created from any of the accompanying causes.

Fig. 7.1.5: *Gas inclusion*

4. **Inclusions** - Straight inclusions and adjusted inclusions are the two sorts of inclusions. It can be either cumulative or isolated. If there is flux or slag in the weld the linear inclusions comes in picture. Slag frames from the utilization of a flux, which is the reason this kind of errors for the most part happens in welding forms that utilizes flux, for example, shielded metal arc welding, submerged arc welding and flux-cored arc welding. This flaw generally happens in welds that need various passes and there is weak overlap among the welds.

Fig. 7.1.6: *Inclusion*

5. **Lack of fusion and incomplete penetration** - The weak hold of the weld bead to the base metal is called lack of fusion. A weld bead that does not start at the basis of the weld groove is called incomplete penetration. Incomplete penetration frames channels and cleft in the base of the weld which can cause difficult problems in pipes since destructive substances can relax in these areas. These sorts of irregularities happen when the welding methods are not clung to; conceivable foundations incorporate electrode angle, electrode control, the current venue and arc length.

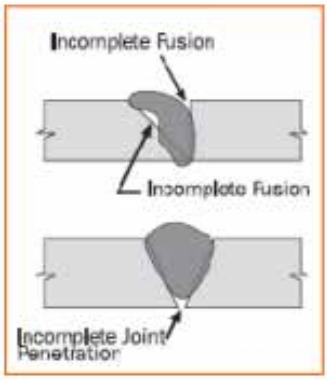

Fig. 7.1.7: *Incomplete fusion*

6. **<u>Lamellar tearing</u>** – At the time of rolling steel plates a sort of welding imperfection that happens is called lamellar tearing. There is a mixture of bases: an extreme quantity of hydrogen in the material, non-metallic inclusions and shrinkage powers opposite to the face of the plates.

7. **Undercut** - It is the point at which the weld falls the cross-sectional width of the base metal, which diminishes the quality of the weld and job piece. One explanation behind this sort of fault is over the top current, making the corners of the joint soften and deplete into the weld; like impression along the length of the weld this leaves with deplete.

Preventive measures from welding defects

Problem	Cause and effect	Remedy and corrective action
Incomplete root penetration	• Welding current too low • Excessively long arc length • Too fast travel speed. • Insufficient heat input.	• Use higher currents, with the range of approve welding Procedure. • Use correct arc length. • Use correct size of electrode diameter to reach into deep, narrow grooves.

Incomplete Fusion	• Weld zone surfaces not free of film or excessive oxides. • Insufficient heat input. • Too large a weld puddle. • Improper weld technique. • Improper joint design	• Clean all weld surfaces. • Increase wire feed speed and voltage but reduce electrode extension. • Increase travel speed and minimize excessive weaving. • While welding, dwell momentarily on the sidewalls of the groove. • Use correct groove angle.
Undercut	• Travel speed, voltage and welding current too high • Insufficient dwell time. • Wrong gun angle.	• Reduce travel speed, voltage, and wire feed speed. • Increase dwell time of electrode at edge to molten weld pool. • Change gun angle so arc force can aid in metal placement.
Cracking	• Poor weld shape. • Incorrect weld size. • Presence of low melting point contaminants from the improperly cleaned joint edges.	• Crater crack can be minimized through the use of a run – off tad • By cleaning the joints to remove surface contaminants. • Filler metal, fluxes and shielding gas are properly stored, handled and utilized to prevent moisture pick-up and contamination.
Porosity	• Inadequate gas shield. • Contaminated gas, electrode and work piece. • Long electrode stickout. • High arc voltage	• Optimize gas flow and eliminate air drafts. • Use welding grade shielding gas. • Use only clean and dry electrodes. • Clean weld surfaces. • Reduce voltage and electrical stickout.
Tungsten Inclusion	• Contact of electrode tip with molten weld pool. • Contact of filler metal with hot tip of electrode. • Contamination of the electrode tip by spatter from the weld pool. • Exceeding the current limit for a given electrode size or type. • Inadequate tightening of the holding collet or electrode chuck.	• Avoid contact of the electrode tip with the molten weld pool and filler wire. • Ensure electrode tip is clean. • Use correct electrical parameters. • Tighten holding collect or electrode chuck. • Ensure adequate shielding.

	• Inadequate shielding gas flow rates or excessive wind drafts resulting in oxidation of the electrode tip. • Defects such as splits or cracks in the electrode. • Use of improper shielding gases like Argon/Co_2 and Argon/O_2	
Distortion	• Metals become larger when heated, and become smaller upon cooling. • During welding the arc heats the metal being welded, causing it to become larger or expand. • As the heat is removed, the surrounding metal and air cause a cooling effect upon the heated area, which results in the metal becoming smaller, or contracting. • When this expansion and contraction is not controlled distortion (Warping) is likely to result. • On the other extreme, if expansion and contraction is restrained, or controlled too rigidly, severe stress and strain may result and impair the weld.	• Reduce the forces that cause shrinkage. • Make shrinkage forces work to reduce distortion. • Balance shrinkage forces with other forces. • Avoid over welding. • Over welding causes distortion, it is a waste of time and money. In may even weaken the joint. • Use proper joint preparation and fit-up. • Use stringer bead. • Use intermittent welds.

Table 7.1.1: *Preventive measures from welding defects*

Ask

- You could ask about the common weld defects.
- You could ask the causes and its remedies of the following defects:
  - (i) Incomplete root penetration
  - (ii) Incomplete fusion
  - (iii) Undercut
  - (iv) Cracking
  - (v) Porosity
  - (vi) Tungsten inclusion
  - (vii) Distortion
- You could ask what defects are usually found along the toe of a weld?

Notes for Facilitation

- Summarize the main points.
- Ask participants if they have any doubts.
- Encourage them to ask questions.
- Answer their queries satisfactorily.

UNIT 7.2: Quality and Inspection tests

Unit Objectives

At the end of this unit, you will be able to:

1. Know about quality and inspection tests
2. Know about welding gages

Do

- Welcome and greet the participants. Revise the learnings of the previous sessions and ask them if they have any doubts.

Notes for Facilitation

- Invite students to participate. List the student responses on the whiteboard.
- Explain the purpose of testing a welded joint
- Explain how to minimize welding defects
- Explain the inspection and testing techniques of welding

7.2.1: Quality

Resources to be used

- Available objects such as a duster, pen, notebook etc.

Say

- A welded structure must be safe and reliable. It is often said that the integrity of a weldment can be achieved when welding design, welding fabrication, material and welding skill are all appropriate.
- Testing and inspection are needed in order to confirm that the weldment meets the requirements.
- In testing, a weldment is examined according to a specified procedure, and the test results are presented in a certain written format.
- In inspection, the test results are checked whether they satisfy the criteria of the specification, and they have to be judged by an inspector.

Elaborate

Inspection items and contents for welding fabrication

Inspection stages	Contents of inspection	
Before welding	(1) Welding equipment	Confirm the perfection of welding power sources, their accessories, jigs, etc.
	(2) Welding consumables	Confirm the size, chemical composition, mechanical properties, usability, and weldability of the welding consumables to be used.
	(3) Base metals	Confirm the chemical composition, mechanical properties, and heat treatment of the base metals to be used.
	(4) Welding joints	Confirm the groove angle, root opening, and surface condition of the welding joints. Confirm the perfection of tack weld beads.
	(5) Welding and related operations	Confirm the required conditions of welding, preheating, post-heating, and postweld heat treatment.
	(6) Welder's and welding operator's skill	Confirm the qualification status and experience of the welders and welding operators to be involved.
During welding	(1) Welding defects and distortion	Check bead appearance layer by layer, and check the distortion occurred in the weldment.
	(2) Welding conditions	Check welding currents, arc voltages, pass sequences, welding positions, and preheat and interpass temperatures.
After welding	(1) Confirm the perfection of postweld heat treatment. (2) Investigate welding defects, distortion, and the size accuracy of the weldment.	

Table 7.2.1: *Weld inspection stages*

Considerations to avoid welding defects:

- Process, type of Welding – Electric Arc, MIG, TIG etc
- The Composition of the base Metal and Thickness
- The Welding Position – Flat, Vertical, Horizontal and Overhead

How to minimize Welding Defects?

- The Travel pace of the Electrode
- Dimension and kind of the Electrode
- Machine setting
- Operator Skill

Ask

- Ask the students the concept of testing and inspection
- Ask the inspection items and contents of inspection in the following stages
  - Before welding
  - During welding
  - After welding
- Ask the students of consideration to avoid welding defects

7.2.2: Testing Techniques

Say

- Testing techniques are classified into 3 categories: Visual inspection, Destructive testing and non-destructive testing.
- A visual test examines bead appearance, width and thickness; welding defects such as undercut, overlap, cracks, pits, and slag inclusions in the surfaces of the welds and whether the throat is as thick as specified, and the misalignment is within the allowance.
- Destructive tests aim to examine the mechanical, chemical, and metallurgical properties of a weldment by breaking, deforming, or chemically processing test specimens removed from a welded joint.
- Nondestructive tests can detect defects in welds by utilizing radiation, ultrasonic waves, electricity, magnetism, or light.

Elaborate

Visual inspection is simple, inexpensive, and is capable of examining many weld zones at onetime. Therefore, it is commonly applied to all welds.

Fig 7.2.1: *Visual inspection*

Destructive tests further classified into following tests:

A) Tensile Test: This test is used for determining the tensile Strength, Yield point and reduction in area.

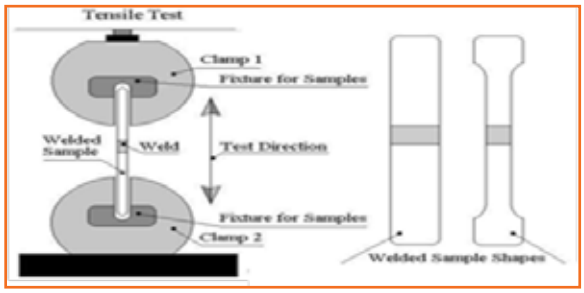

Fig 7.2.2: *Tensile test*

B) Bend Test: Bend tests examine the ductility of welds and whether they contain welding defects or not.

Fig 7.2.3: *Bend test*

C) Impact Test: Impact Test is conducted to determine the resistance to impact loads or shock loads.

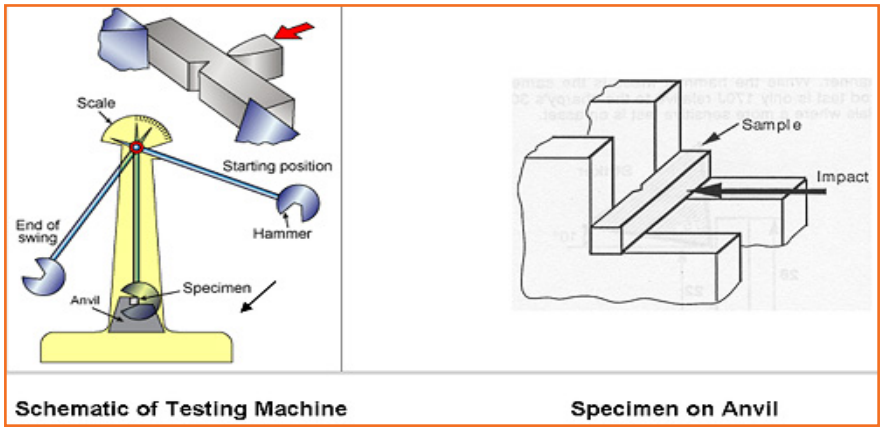

Fig 7.2.4: *Impact test*

D) Hardness test: The hardness of a weld is the ability to resist indentation or penetration by the point of a material that is harder than the weld being tested.

Fig 7.2.5: *Hardness test*

Non-destructive tests Destructive tests are conducted for test specimens, not for a product. Since finished products should never be fractured by a test, it is important to examine the soundness of welds without breaking them. For this purpose, nondestructive tests are conducted.

Some of the nondestructive tests are:

A) Radiographic test: When an accelerated electron hits a target of heavy metal, the radiation emanates. This radiation is a kind of electromagnetic wave; and the shorter the wavelength, the stronger its penetrative capacity. X-rays and γ-rays are called the radiographic test.

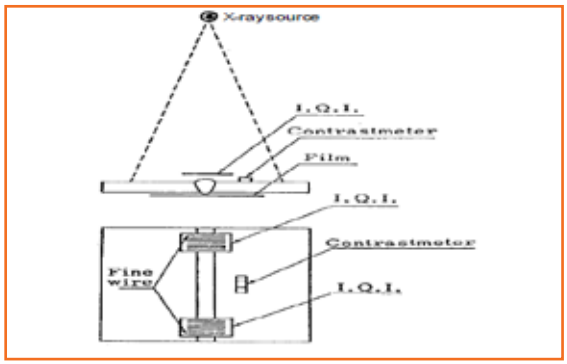

Fig 7.2.6: *Radiographic test*

B) **Ultrasonic test (UT)**: The ultrasonic test is a detection method which causes an inaudible, short sonic wave of 0.5-15 MHZ (megahertz) to penetrate the object to be tested.

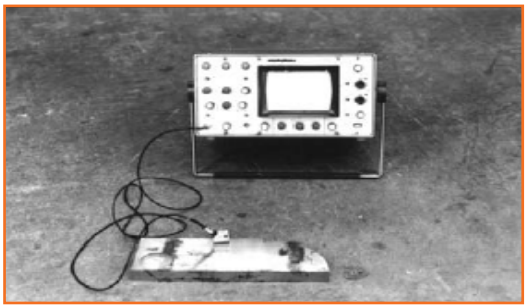

Fig 7.2.7: *Ultrasonic test (UT)*

C) **Penetrant test:** The penetrant test uses fluorescent or red penetrant to visualize defects that open to the surface of a weld zone, such as cracks and pits.

D) Magnetic Particle Inspection:- This process can be used to detect surface and slightly sub-surface cracks in ferro-magnetic materials.

Fig 7.2.8: *Magnetic Particle Inspection*

Demonstrate

Procedure of penetrant test:

This procedure is as follows:

- Clean the surface of the weld and the weld vicinity
- Spray the surface with a liquid dye that has good penetrating properties
- Carefully wipe all the die off the surface
- Spray the surface with a white powder
- Any cracks will have trapped some die which will weep out and discolor the white coating and be clearly visible.

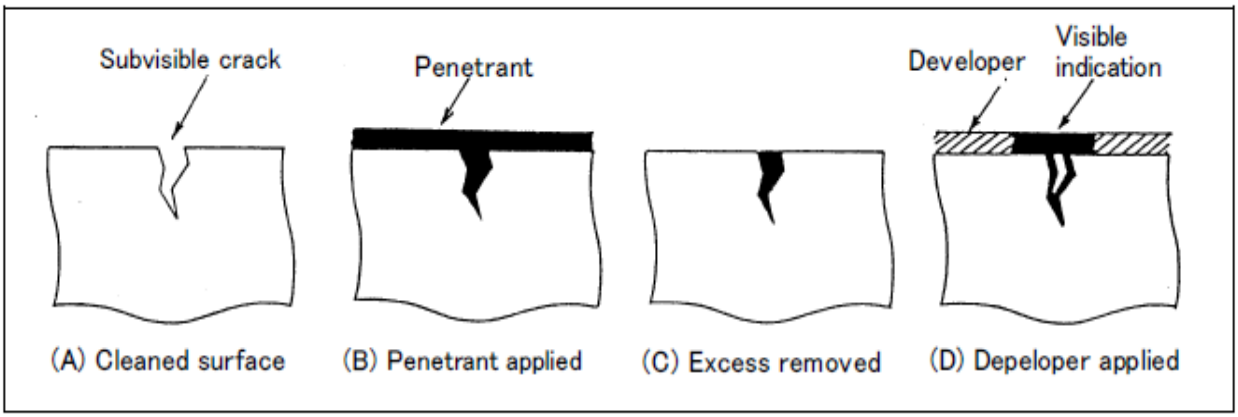

Fig 7.2.9: *Penetrant test*

Do

- Demonstrate how different testing techniques applied.
- Show the procedure of penetrant test under nondestructive test

Ask

- You could ask when nondestructive tests are conducted
- You could ask what are the tests under destructive test
- You could ask name the two methods which is called as radiographic test
- You could ask the process of magnetic particle inspection

Activity

- Conduct a skill practice activity.
- Ask the students to assemble together.
- Explain the purpose and duration of the activity.
- Set guidelines pertaining to discipline and expected tasks.

Skill Practice	Time	Resources
Perform destructive tests and non-destructive tests	4 hours	Destructive tests machines Non - destructive tests machines
		Rotary machine

Do

- Ask them to get practice the activity in pairs.
- Go around and make sure they are doing it properly.

Notes for Facilitation

- Summarize the main points.
- Ask participants if they have any doubts.
- Encourage them to ask questions.
- Answer their queries satisfactorily.

7.2.3: Welding gauges

Say

- Welding gauges include hi-lo welding gauges, weld gauge and fillet weld gauge
- Welding gauge measures internal alignment of pipe after fit-up/alignment. This cuts radiographic rejects. It measures internal misalignment of pipe before and after tacking.
- Bridge Cam Gauge is a unique, versatile instrument for the inspection of welded surfaces and joints.
- Fillet Weld Gauge allows fast, accurate measurement of eleven (11) fillet weld sizes.

Elaborate

Hi-lo welding gage

After fit-up/arrangement the internal positioning of pipe can be measure by the Welding Gage. This deletes radiographic denial. It gauges interior misalignment of pipe after and before tacking. Approximations perused in metric on the inverse side and inch on other side. The gauge measures inner mismatch of crown height, weld filet, pipe wall and scribe lines.

Weld Gauge or Bridge Cam Gauge

Bridge Cam Gauge is used for the review of welded surfaces and joints, adaptable instrument.

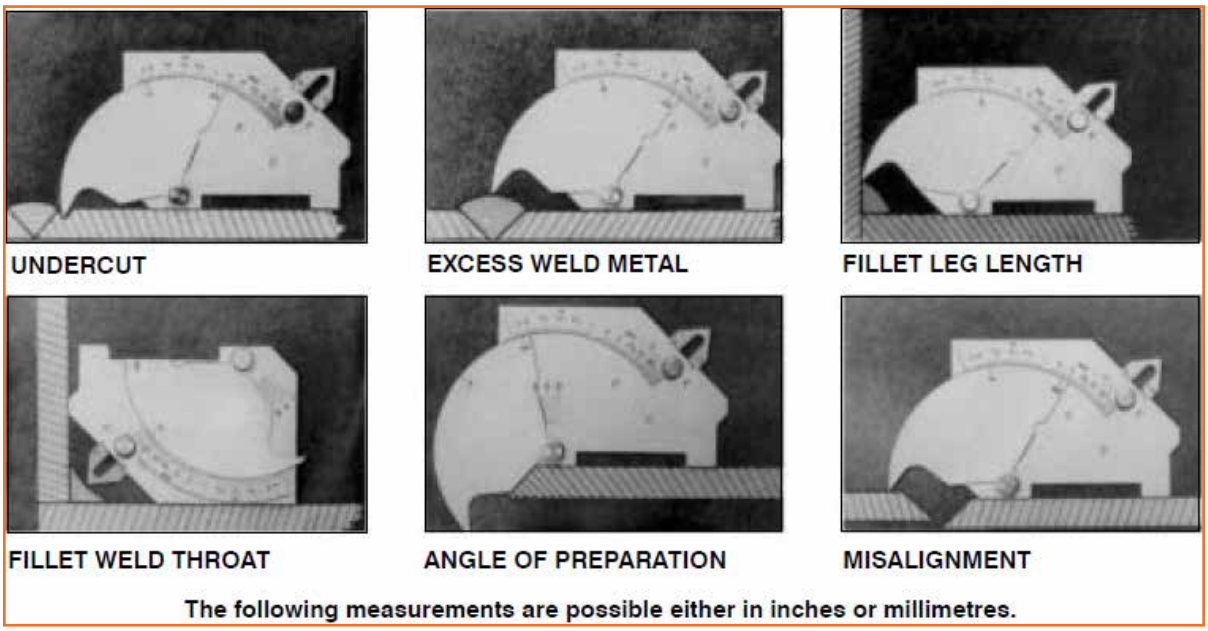

Fig 7.2.10: *Using bridge cam gauge*

- It evaluates angle of provision, 0 to 60 º, abundance weld metal (topping size), and profundity of undercut, fillet weld throat size, profundity of setting, fillet leg length, misalignment (high-low), and linear dimensions up to 60mm or 2 inches.
- It defines in millimeters and inch both.

- It is simple to use. It contains one sliding pointer and one rotating dial. Move the pointer or dial till it creates suitable connection and after that reads the outcome.

Fillet Weld Gauge

Fillet Weld Gauge permits quick, precise estimation of eleven (11) filet weld sizes: 7/8, 1/8, 1/4, 3/16, 5/16, 1", 7/16, 3/8, 1/2, 5/8 and 3/4 and their metric counterparts, to decide weld sizes, either convex or concave.

It is easy to use. Gauge blade needs to be level to the base material with the tip beating the vertical part. For finding convex welds utilize the single bend corners. Whether the welds are concave, (undersize) utilize the double arc corners for deciding.

Fig 7.2.11: *Fillet weld gauge*

Demonstrate

Checking internal alignment by Hi-Lo welding gauge

1. Unlock the retaining screws. Press the gage legs past the barrel.
2. First check the two bits of pipe to be fitted by insert the legs (wires) into the root gap space. To apply a consistent back pressure to the barrel turns the gage 90 º.
3. To get a precise perusing hold the gage as square as possible with the fitting. Bolt the recalling screw, now reverse the order by 90º turn and expel the gage. Now ready to prepare to peruse the growth opposed to the red line.
4. You have a nice inner arrangement and fit-up when the red line lines up with the 1/32 rise. By increase markings of 1/16 inch misalignment can be resolved from the zero line.

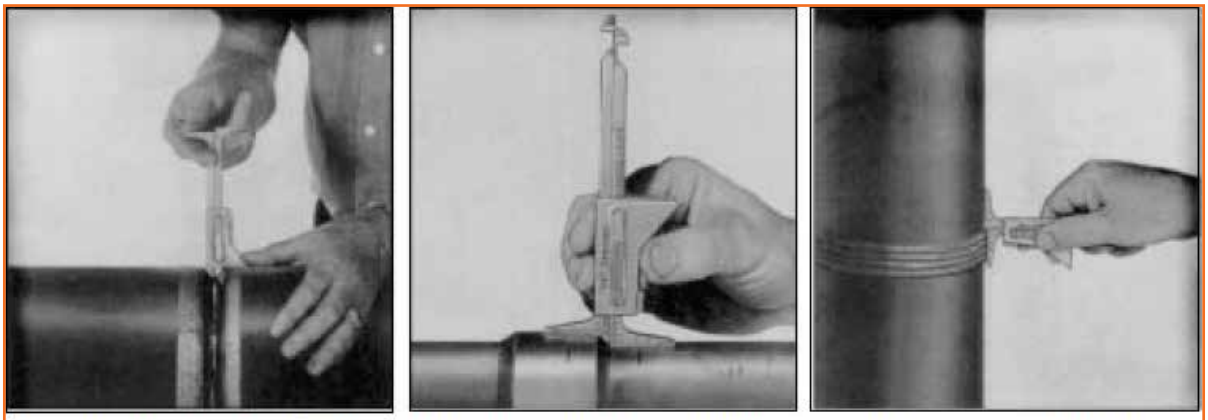

Measure internal mismatch, pipe wall. | Measure scribe lines, weld fillet. | Measure crown height.

Fig 7.2.12: *Using Hi-lo welding gauge*

Ask

- You could ask the steps to check internal alignment
- You could ask about the fillet weld gauge

Activity

- Conduct a skill practice activity.
- Ask the students to assemble together.
- Explain the purpose and duration of the activity.
- Set guidelines pertaining to discipline and expected tasks.

Skill Practice	Time	Resources
Check internal alignment	60 min	Screws
		Hi-lo welding gauge

Do

- Ask them to get into pairs for practice.
- Go around and make sure they are doing it properly.

Notes for Facilitation

- Summarize the main points.
- Ask participants if they have any doubts.
- Encourage them to ask questions.
- Answer their queries satisfactorily.

Notes

Skill India
कौशल भारत-कुशल भारत

सत्यमेव जयते
GOVERNMENT OF INDIA
MINISTRY OF SKILL DEVELOPMENT
& ENTREPRENEURSHIP

N·S·D·C
National
Skill Development
Corporation
Transforming the skill landscape

INDIAN IRON & STEEL SECTOR SKILL COUNCIL

8. Oxy-fuel gas cutting

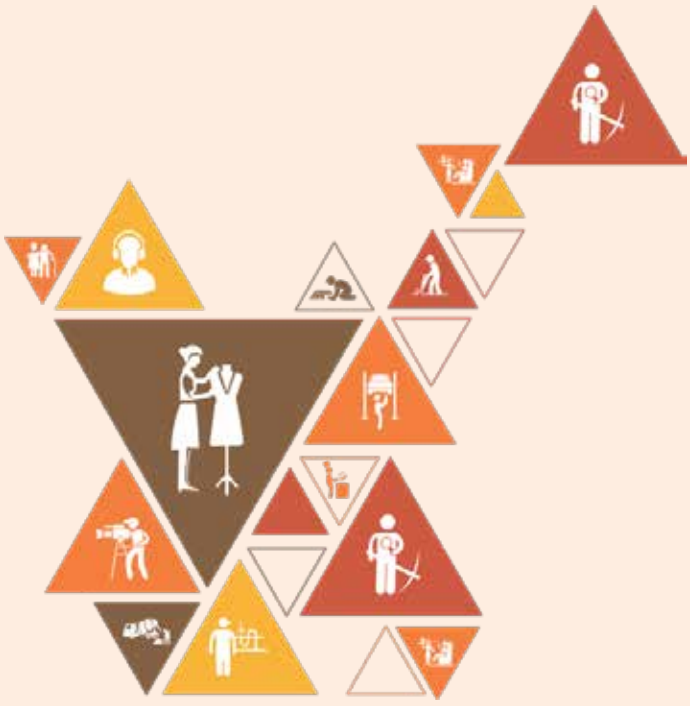

CSC/N0144

Key Learning Outcomes

At the end of this module, students will be able to:

1. Know about oxy-fuel gas cutting process
2. Know about different parameters of oxy-fuel gas cutting
3. Know about equipments used in oxy-fuel gas cutting
4. Know about setup and operation of gas cutting welding
5. Know about oxy-fuel gas cutting techniques
6. Know about cutting quality check
7. Know about safety precautions during gas cutting

UNIT 8.1: Oxy-fuel gas cutting

Unit Objectives

At the end of this unit, you will be able to:

1. Know about oxy-fuel gas cutting
2. Know about fundamental process of oxy-fuel gas cutting

Resources to be used

- Invigilator can use the available objects such as a marker, duster, pen, notebook, participant manual etc.
- PC with LCD Projector or Flip Chart

Do

- Welcome and greet the participants. Revise the learnings of the previous sessions and ask them if they have any doubts.

Say

- Oxy-fuel cutting is a cutting process which utilizes fuel gasses and oxygen for welding and cutting metals.
- This process utilizes heat from an oxy-fuel gas fire and increases metal temperature to its kindling temperature prior to a flow of high-pressure oxygen onto the metal, which causes the cut in the metal.
- The temperature at which quick oxidation (burning) of material starts; is known as kindling temperature of that material. Steel has the kindling temperature in pure oxygen is 870 °C to 900 °C.
- Manual, motorized, and programmed oxy-fuel gas cutting procedures are utilized as a part of industry. Manual cutting, controlled by hand is usually applied in small run production industries, and in destruction and scrapping operations.
- Motorized or programmed cutting is broadly utilized as a part fabrication work where a substantial amount of indistinguishable cuts are done again and again or where exceptionally exact cuts are needed.
- The cutting technique is a blend of fuel gas and oxygen and it preheats the metal to its 'ignition' temperature like steel has ingniton temperature of 700°C - 900°C (bright red heat) which is below its melting point. A direct stream of unpolluted oxygen onto the preheated part for initiating a exothermic chemical reaction between metal and oxygen to produce slag and iron oxide. Stream of oxygen then blows away the slag and penetrate the material and make the cut in the material.

- Oxy-fuel gas cutting is used to cut iron-based alloys.
- Most non-ferrous metals, such as brass, copper and aluminium, cannot be cut by oxy-fuel cutting. A few reactive non-ferrous metals, such as titanium and magnesium, can be cut.

Elaborate

Uses/Applications of Oxy-Fuel Gas Cutting:

1. To prepare edges of plates for bevel and groove weld joint designs.
2. To cut small sized work pieces from bigger plates for further processing.
3. To cut rivets gates and risers from castings.
4. To cut many layers of thin sheets at the same time (stack cutting) to reduce both time and cost for production work.
5. To pierce holes and slots in steel plates.
6. For salvage work

Advantages

- Shapes and sizes difficult to be machined by mechanical methods can be easily cut by flame cutting.
- The process is faster than mechanical cutting methods.
- The cost of flame cutting is low as compared to that on a machine tool, i.e. mechanical cutting machine.
- Flame cutting equipment being portable also, can be used for the field work.
- Multi-torch machines can cut a number of pieces simultaneously.

Disadvantages

- Flame cutting is limited to the cutting of steels and cast iron.
- As compared to mechanical cutting, the dimensional tolerances are poor.
- The place of cutting needs adequate ventilation and proper fume control.
- The expelled red hot slag and other particles present fire and burn hazards to plant and workers.

The four fundamental prerequisites for oxy-fuel cutting are:

- Metal can melt or run away prior to cutting, if the ignition temperature is not less than the melting temperature of metal.
- The melting point of oxide should be less in comparison to the encompassing material so that it can easily driven by oxygen surge.

- To keep up the ignition temperature, the oxidation reaction between metal and oxygen jet is sufficient.
- A least of vaporous response items ought to be delivered to make sure not to dilute the cutting oxygen.

Ask

- You could ask about the oxy-fuel gas cutting and its basic requirements
- You could ask the applications of oxy-fuel gas cutting
- You could ask the advantages and disadvantages of oxy-fuel gas cutting

Activity

- Conduct a skill practice activity.
- Ask the students to assemble together.
- Explain the purpose and duration of the activity.
- Set guidelines pertaining to discipline and expected tasks.

Skill Practice	Time	Resources
Process of oxy-fuel cutting	1 hour	Mixture of oxygen and fuel gas, Metal, Candle, matchstick

Do

- Ask them to get into pairs for practice.
- Go around and make sure they are doing it properly.

Notes for Facilitation

- Summarize the main points.
- Ask participants if they have any doubts.
- Encourage them to ask questions.
- Answer their queries satisfactorily.

UNIT 8.2: Oxy-fuel gas cutting equipments, gases and torch

Unit Objectives

At the end of this unit, students will be able to:

1. Know about oxy-fuel gas cutting equipments
2. Know about how to select gas for oxy-fuel gas cutting
3. Know about cutting torch used

Resources to be used

- Invigilator can use the available objects such as a marker, duster, pen, notebook, participant manual etc.
- PC with LCD Projector or Flip Chart
- Oxy fuel gas equipments etc.

Do

- Welcome and greet the participants. Revise the learnings of the previous sessions and ask them if they have any doubts.

Say

- Equipment's use for gas welding process are - Pressure Gauges, Hoses, Welding torch, Check valve, Non return valve.
- Fuel gas combustion occurs in two distinct zones. 1. Inner zone 2. Outer zone
- The oxyacetylene hand torch is the most common type of oxy-fuel gas cutting torch used in industry.

Notes for Facilitation

- Explain about the zones of a fuel gas combustion
- Explain about the types of flames
- Explain about equipments used for oxy-fuel gas gutting

UNIT 8.2.1: Oxy-fuel gas cutting equipments

Say

- Gas cylinders consist of oxygen cylinder and fuel gas cylinders.
- Regulators maintain a constant torch pressure although cylinder pressure may vary.
- Regulator diaphragms are made of stainless steel.
- A flashback is where the flame burns in the torch body, accompanied by a whistling sound.

Elaborate

- **Oxygen Cylinder**: Oxygen gas is stored inside the cylinders having different pressure (2000-2640 PSI) and capacity. Cylinder are frequently artificially cleaned and tempered to soothe stresses made by taking care of. Oxygen cylinder join a thin metal "pressure safety disk" made out of using stainless steel and are intended to break the preceding the cylinder getting to be noticeably harmed by pressure.
- **Fuel gas cylinders**: Fuel gas is stored in cylinders specially designed for this purpose only.
- **Regulators:** Reduce high capacity cylinder pressure to bring down attempting pressure. The majority Regulator need a gage for cylinder pressure as well as attempting pressure. Regulator needs to be close off when changing screw is turning out totally.

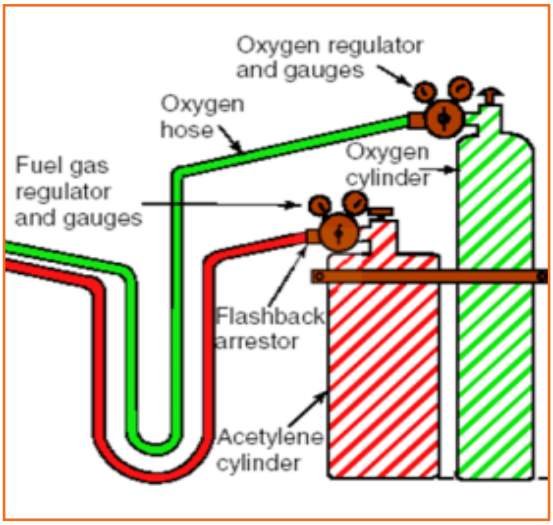

Fig 8.2.1: *Oxyfuel setup process*

- **Regulator hoses**: Hoses are made out of rubber. Oxygen hoses have shade green Furthermore contain right hand string. Acetylene hoses have shade red for left hand string.
- **Flashback Arrestors**: Flashback arresters (additionally called Flame traps) should be fitted with oxygen plus with acetylene gas lines together to prevent a flashback fire from getting into the regulators.
- **Fuel gas valves**: Fuel gas cylinder stopped valves must just be open 1/4 to 1/2 turn, which enables barrel to shut rapidly if there should be an occurrence of flame.

Do

- Show the cylinders and related accessories to trainees.
- Show the cleaning process of cylinders and valves to trainees.

Ask

- You could ask about the oxy fuel gas cutting equipments.
- Ask about types of valves and cylinders used for process.

UNIT 8.2.2: Selection of fuel gas

Say

- Fuel gas combustion occurs in two distinct zones. 1. Inner zone 2. Outer zone
- The five most commonly used fuel gases are acetylene, propane, MAPP (methylacetylene propadiene), propylene and natural gas.
- Oxy-fuel gas cutting is most commonly performed with oxygen and acetylene gas.

Elaborate

The inner zone (Primary combustion Zone) is the hottest piece of the fire. The welding ought to be performed so as the purpose of the inner zone ought to be just above the joint edges. In this zone the fuel gas reacts with oxygen to produce hydrogen and carbon monoxide, equation of this chemical reaction is:-

$$2C_2H_2 + 2O_2 \rightarrow 4CO + 2H_2$$

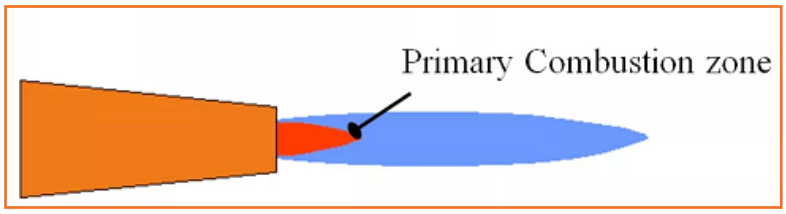

Fig 8.2.2: *Primary zone*

The outer zone (secondary combustion zone) envelope performs two functions-

1. Preheats the joint edges
2. Prevents oxidation by utilizing a portion of the encompassing oxygen from weld pool for combustion and radiates carbon dioxide and water vapor.

$$4CO+2H_2 +3O_2 \rightarrow 4CO_2 +2H_2O$$

Fig 8.2.3: *Secondary zone*

Fuel gases are described as:

- Flame temperature - tip of inner cone is the hottest part of the flame
- Fuel gas to oxygen proportion – It is the fuel gas amount necessary for ignition however this will differ on the basis of neutral and oxidizing nature of flame.
- heat of combustion - heat of combustion is greater in the external portion of the flame

The properties of the gases are:-

Fuel gas	Flame (Celsius °)	Oxygen to fuel has ratio (Vol.)	Heat distribution (kj/m3)	
			Primary	Secondary
Acetylene	3087	1.2:1	18,890	35,882
MAPP®	2927	3.3:1	15,445	56,431
Natural gas	2538	1.8:1	1,490	35,770
Propane	2526	4.3:1	10,433	85,325
Propylene	2867	3.7:1	16,000	72,000
Hydrogen	2660	0.42:1	-	-

Table 8.2.1: *Fuel gases properties*

Ask

- You could ask about the properties of the following gases
  - (i) Acetylene
  - (ii) Natural gas
  - (iii) Propane
  - (iv) Propylene
  - (v) Hydrogen
- You could ask about the characteristics of fuel gases
- You could ask about the distinct zones of fuel gas combustion

Activity

- Conduct a skill practice activity.
- Ask the students to assemble together.
- Explain the purpose and duration of the activity.
- Set guidelines pertaining to discipline and expected tasks.

Skill Practice	Time	Resources
Show the flames	5 min	Candle
		Matchstick

Do

- Ask them to get into pairs for practice.
- Go around and make sure they are doing it properly.
- Wrap the unit up after summarizing the key points and answering questions.

UNIT 8.2.3: Types of flame

Say

- Three basic types of oxy-gas flames used in oxyfuel-gas welding and cutting operations:

  (i) Neutral flame (ii) Oxidizing flame (iii) Reducing flame

Elaborate

1. **Neutral flame** -Blue envelope of flame surrounded by bright whitish cone is called Neutral flame. Its temperature is around 3200°C. It is utilized for welding aluminum, steel, copper and cast iron.

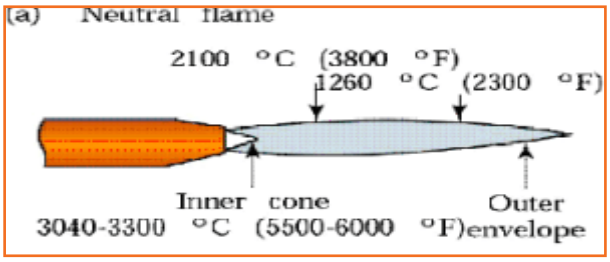

2. **Oxidizing flame**-Once we have additional oxygen to our existing, the cone winds up more darker and extra pointed, whereas the envelope ends up short and fiercer known as Oxidizing fire. Its temperature is around 3400^{0}C. It is utilized for welding and brazing purposes.

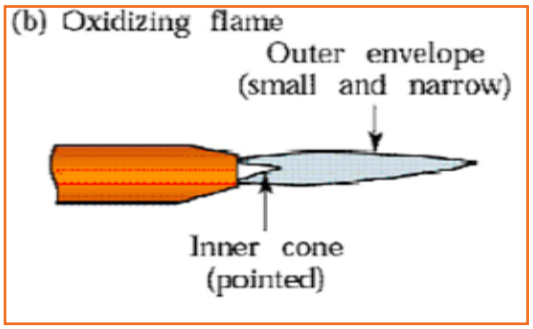

3. **Carburizing flame**-One the Oxygen is switched on, flame promptly transforms itself into a long white inner area encompassed by a see-through blue envelope known as Carburizing fire. Its temperature is around 3000^{0}C.

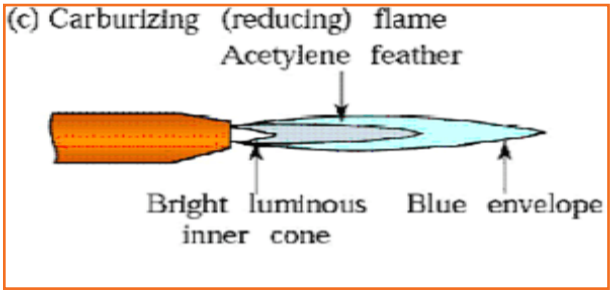

Fig 8.2.4: *Types of flames*

Ask

- You could ask the three basic types of oxy gas flames and their properties.

UNIT 8.2.4: Cutting torch

Say

- The oxy-acetylene hand torch is the most common type of oxy-fuel gas cutting torch used in industry.
- The oxy-acetylene torch has following parts:
  - torch body (or handle)
  - two distinct gas tubes (in the course of the handle linked with the hoses)
  - distinct control valves
  - mixer chamber
  - flame tube
  - welding tip
- Oxygen is mixed with the fuel gas to form a high temperature pre-heating flame.
- Two methods are used to mix the gases. One method uses a mixing chamber, and the other method uses an injector chamber.
- Most cutting tips are made of copper alloy, but some tips are chrome.
- The amount of pre-heat flame required to make a perfect cut is determined by the type of fuel gas used and by the material thickness, shape and surface condition.
- The cutting torch nozzles are so designed that they have a central port around which is either an annulus or several smaller ports.

Elaborate

- The mixing chamber may be located in the torch body or in the tip. Torches that use a mixing chamber are known as equal-pressure torches because the gases must enter the mixing chamber under the same pressure. The mixing chamber is larger than both the gas inlet and the gas outlet.

  Injector torches will work with both equal gas pressures and low fuel gas pressures. The injector allows the oxygen to draw the fuel gas into the chamber even if the fuel gas pressure is as low as 26 g/cm². An injector-type torch must be used if a low-pressure acetylene generator or low pressure residential natural gas is used as the fuel gas supply.

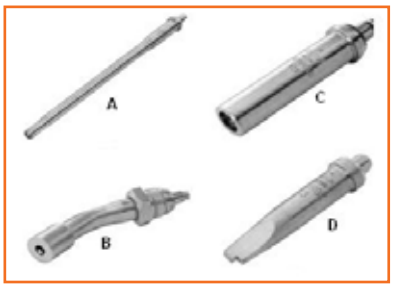

Fig 8.2.5: *Cutting torch tip type*

- Tip designs change for the different types of uses and gases, and from one torch manufacturer to another. Tips for straight cutting are either standard or high speed. The high-speed cutting tip is designed to allow a higher cutting oxygen pressure, which allows the torch to travel faster. High-speed tips are also available for different types of fuel gases. Finding the correctly sized tip for a job can be confusing, especially if you are using the cutting unit for the first time. To make it easier to select a tip, you can use a standard set of

- Tip cleaners to find the size of the centre cutting orifice. A wide variety of tip shapes are also available for specialised cutting jobs.
- Special cutting tips come in a variety of shapes for many purposes. They can have different sixes and numbers of pre-heat holes, (A) 25 mm long cutting tip; (B) water cooled tip; (C) two piece cutting tip; (D) sheet metal cutting tip. Always choose the correct type and size of tip for the specific cutting job
- Typical cutting nozzle design feature:

  (i) One-piece cutting nozzle of acetylene has no skirt, 3-9 pre-heat holes, parallel bore.

  (ii) Two-piece cutting nozzle of acetylene has no skirt, pre-heat annulus, venturi bore.

  (iii) Two-piece nozzle of natural gas has no skirt, pre-heat flutes, venturi bore.

  (iv) Two-piece nozzle of propane has long skirt, pre-heat slots, parallel bore.

  (v) Two-piece nozzle of propane has long skirt, pre-heat slots, parallel bore, and oxygen curtain.

Do

- The cutting head may hold the cutting tip at a right angle to the torch body or it may be held at a slight angle.
- Make sure the tip is designed for the type of fuel gas being used.

Demonstrate

Nozzle cleaning process

Holes must only be cleaned with a special nozzle cleaner of correct size. Hold at right angles to the nozzle end.

If end of nozzle is damaged rub with a piece of fine emery paper laid on a piece of glass. Hold nozzle at right angles to glass so that edges of holes are made sharp and square. Clean dirty nozzles by immersion in a solution containing nozzle cleaning compound

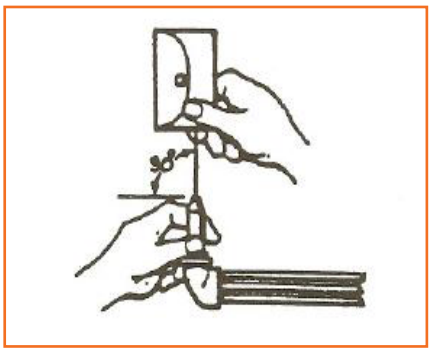

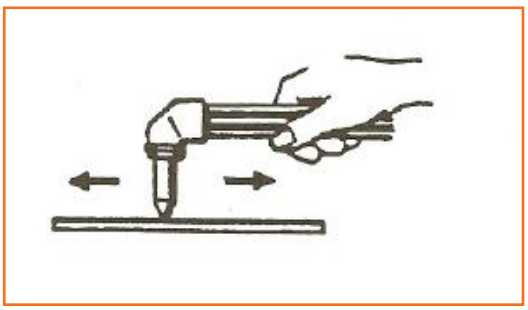

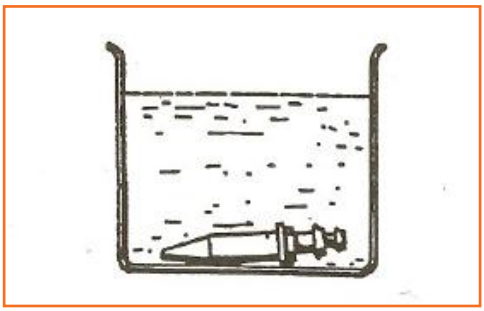

Fig 8.2.6: *Nozzle cleaning*

Lab

- You could show the methods are used to mix the gases i.e. mixing chamber and injector chamber

Ask

- You could ask what torch component is made of high temperature plastic
- You could ask what type of shield is used for extended cutting applications
- You could ask about the methods are used to mix the gases
- You could ask the typical cutting nozzle design feature
- You could ask to explain the process of nozzle cleaning

UNIT 8.3: Oxy-fuel cutting, set-up and operation

Unit Objectives

At the end of this unit, students will be able to:

1. Know about oxy-fuel gas cutting process setup
2. Know about oxy-fuel gas cutting operation

Resources to be used

- Invigilator can use the available objects such as a marker, duster, pen, notebook, participant manual etc.
- PC with LCD Projector or Flip Chart
- Oxy-fuel gas cutting equipments etc.

Do

- Welcome and greet the participants. Revise the learnings of the previous sessions and ask them if they have any doubts.

Say

- While cutting, it becomes critical to the welder to stay stable keeping in mind the end goal to make the cut as smooth as could reasonably be expected. A welder should be relax and allowed to move the torch alongside the line to be cutting off.
- You need to follow proper cutting process for desired results.

Notes for Facilitation

- Explain the cutting process
- Explain the steps of setting up torch
- Explain the steps for using the cutting torch

UNIT 8.3.1: Cutting process

Say

- When making a cut with a hand torch, it is important for the welder to be steady in order to make the cut as smooth as possible.
- Pre-heating and piercing are the important part of the cutting process
- Lay out, setting the pressure, chemistry and physics are the parts of cutting process
- The oxy-fuel gas cutting torch works when the metal being cut rapidly oxidises or burns
- As a cut progresses along a plate, a record of what happened during the cut is preserved along both sides of the kerf. This record indicates to the welder what was correct or incorrect with the pre-heat flame, cutting speed, and oxygen pressure.

Elaborate

Preheating: To pre-heat the metal by flame, keep the torch at little forward angle and maintain a portion of the reflected flame to heat off the tip. This clears the dirt and oxides from the cut and stops the slag from blown back and maintain the cleanliness of torch tip for longer duration. The forward angle is utilized just for a straight line square cut. In the event that figures are cut utilizing a minor edge, the piece would have an angled side.

While cutting, keep the distance between inner cones of flame and surface of plate is 3 mm to 10 mm and this distance is called coupling distance.

Piercing: When starting the cut in a position apart from the edge of plate, hold the inner cones nearest to the metal. When an internal cone comes in contact then metal accelerates the pre-heat duration. Start the cut when metal is hot enough, depress the cutting lever slightly and raise the cutting torch. When the piercing of metal completes; lower down the cutting torch.

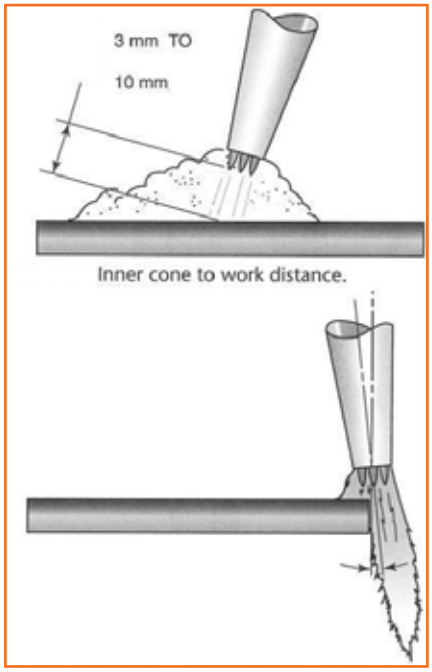

Fig 8.3.1: *Pre-heating*

Layout

Use chalk line for drawing the line on metal to be cut. A scribe or a punch should be utilized for acquiring an exact line.Both scribe and punch can both be utilized to format an exact line, yet while cutting we can see the punched line. A punch could be hold with an angle simply over the metal surface. Hammer can leave a mark, if used for marking on metal.

Selection of correct tip and pressure setting

Every manufacturer has own numbering system for identifying the required tip size. It is difficult to recall all frameworks. At the backside of most tip cleaning sets, the comparable drill size of each tip cleaner is mentioned.

The chemistry of the cut

When metal is pre-heated to a temperature over its kindling point, then fast oxidization or burning happens due to flow of high pressure oxygen on it. The procedure works effortlessly on all metals which can be quickly oxidize, for example, press, low carbon steel, magnesium, titanium and zinc.

Physics of the cut

1. **Pre-heat:** The dimension and amount of pre-heat holes in a tip affects base and top of metal sheet. Top edge of the metal plate can be melted and become round in shape if pre-heat flame is in excess amount. Because of this, large amount of slag deposited on the plate which is difficult to remove from the plate. When the flame is very little then the travel speed must be slower. A decrease in rate might bring about the cutting stream enlarging from all the sides.
2. **Speed:** Cutting speed should be enough to make the drag lines at 900 angle to the plate. If speed is too fast, then cut can be incomplete because flame has not pass through the plate completely. If speed is too slow, then cutting stream wandering around the plate and in this way results in gouges at the side of the cut.
3. **Pressure:** A right pressure setting brings about the cutting edge being level and even. If setting of pressure is too high, this makes the cutting flow grow while leaving the tip, bringing about the edges of the kerfs being somewhat in curved shape. At the point when the setting of pressure is very less, the cut might not totally pass through the metal.

Ask

- You could ask the concept of pre heating and piercing in the cutting process
- You could ask the term layout
- You could ask what are the important points to be covered in physics of the cut

UNIT 8.3.2: Setting-up Cutting torch

Demonstrate

Steps for setting up-torch

Step1: **Hook up the gauges to the suitable tanks:** Generally, the oxygen hoses and tanks are green in color and for acetylene color is red. Fittings of both the tanks are made of brass, so can damage very easily. Use wrench to fix the fittings properly.

Step2: Turn off the acetylene gas regulator by moving 'Tee' handle. Never permit acetylene gas pressure to surpass 15 PSI. Acetylene can become unstabel at high pressure and can sxplode too. To ensure the gas is been directed towards right force, do the following:

- Turn on the acetylene gas tank and regulator valve.
- Unlock the gas valve of the cutting torch lever and listen to gas getting away to vent the environment from the acetylene hose. Make sure that gas regulator is set a correct pressure.
- Turn off torch acetylene valve.

Step3: **Turn the oxygen regulator pressure off and after that regulates the oxygen pressure.** Move regulator gauge and turn off pressure. Then adjust the pressure by following these steps:

- Open main oxygen tank valve.
- Release regulator valve and set the pressure between of 25 to 40 PSI.
- Release the torch oxygen valve and release the gas out of hose.
- Lock the forward valve.

Do

To make sure the gas is regulated to the correct pressure, do the following:

- After turning on the main acetylene tank valve, open the regulator valve by turning the tee handle clockwise. This should be done very slowly, while watching the low pressure gauge.
- To vent the atmosphere from the acetylene hose, open the gas valve on the cutting torch handle until you hear gas escaping, then observe the low pressure gauge to see if the pressure remains steady during flow and ensure that you have this regulator set correctly.
- Close the acetylene valve on the torch.

UNIT 8.3.3: Oxy-fuel Cutting operation

Demonstrate

Steps for using the cutting torch

Step1: The welder should wear his **gloves and goggles prior to lighting the torch**. The welder should check his range once again for flammable material and you must be set to work.

Step2: **Light the torch.** Permit the oxygen gas to stay in mixing chamber to cleanse for a couple of moments by opening the acetylene valve once more. Hold the torch tip in front of lighter and then press the handle for lighting the torch. A little yellow flame appears at the tip and flashes from lighter set fire to the acetylene.

Step3: Regulate the acetylene valve till yellow flame size become around 10 inches (25.4 cm) long.

Step4: Slowly rotate the forward oxygen valve. If supply of oxygen is enough to combust the acetylene, then the color of flame changes from yellow to blue. Raise oxygen input till that blue flame starts shrinking back towards tip.

Step5: Open the oxygen valve for expanding the flame measure over the steel has to cut. If blue flame is inconsistent due to extra oxygen, then regulate and reduce the oxygen supply until the flame become conical in shape and stable.

Step6: Bring near the tip of the internal flame towars the surface. Heat the metal sheet through the flame unless a liquid pool of metal forms. This will take around 45 seconds for 1/4-inch plate steel at room temperature. Maintain the flame tip consistent and at a distance of 3/8 inch from the metal's surface to heat up a single point.

Step7: Slowly push down the handle of cutting valve for releasing stream of oxygen, which in turn sets fire to molten metal. In the event that a rough response in a split second begins, the steel has lighted, and you can step by step increment pressure until the point when the stream is cutting totally through the metal.

Step8: Start stirring the torch gradually along with the line of the cut when the stream is cutting the steel all the way. Cut the metal slowly because melted slag extinguished the back or base of cut.

Step9: Continue cutting until the sheet has been cut in two parts. Make sure that slag has not fall down on the foot.

Step10: Allow the metal to cool naturally or use water for cooling. If you put superheated bit of steel into a bucket or icy water then a blow off steam can generate.

- **This is just for mild steel**, as water cooling would influence extinguish and temper-sort steels.

Step11: **Clean the slag from the cut**. Grind the cut smoother if more exact fit is preferred.

Activity

- Conduct a skill practice activity.
- Ask the students to assemble together.
- Explain the purpose and duration of the activity.
- Set guidelines pertaining to discipline and expected tasks.

Skill Practice	Time	Resources
Performing oxy-fuel gas cutting operation	4 hours	Oxy-fuel gas cutting equipment

Do

- Ask them to get into pairs for practice.
- Go around and make sure they are doing it properly.

Notes for Facilitation

- Summarize the main points.
- Ask participants if they have any doubts.
- Encourage them to ask questions.
- Answer their queries satisfactorily.

UNIT 8.4: Oxy-fuel gas cutting techniques

Unit Objectives

At the end of this unit, students will be able to:

1. Know about oxy-fuel gas cutting techniques

Resources to be used

- Available objects such as black or white Board, chalk pieces or white board marker pens, duster, Participant manual.
- PC with LCD Projector or Flip chart
- Oxy-fuel gas setup, workpiece and accessories required

Do

- Welcome and greet the participants. Revise the learnings of the previous sessions and ask them if they have any doubts.

Say

- Low carbon steel plate can be cut quickly and accurately, whether thin-gauge sheet metal, or sections more than 1.2 m thick are used.
- Any piece being cut should be supported so the torch flame will not cut through the piece and into the table. Special cutting tables are used that expose only a small metal area to the torch flame.
- In manual torch cutting a guide or support is frequently used to allow for better control and more even cutting.
- Various types of guides can be used to guide the torch in a straight line.
- To cut mild-carbon steel with the oxy-gas cutting torch, you should adjust the preheating flames to neutral.
- Steel, that is greater than 1/8 inch thick, can be cut by holding the torch so the tip is almost vertical to the surface of the metal.
- It is more difficult to cut cast iron than steel because the iron oxides in cast iron melt at a higher temperature than the cast iron itself.
- Cutting curved grooves on the edge or surface of a plate and removing faulty welds for re-welding are additional uses for the cutting torch.

- When bevel cutting, you adjust the tip so the pre-heating orifices straddle the cut. Apiece of l-inch angle iron, with the angle up, makes an excellent guide for beveling straight edges.
- The cutting torch is an excellent tool for removing rivets from structures to be disassembled. The basic method is to heat the head of the rivet to cutting temperature by using the preheating flames of the cutting torch.

Elaborate

Cutting mild-carbon steel

Adjust preheat flame to neutral for cutting of mild-carbon steel. Hold the cutting torch at 900 angle from the surface and keep the preheat flames atleast 1/16 inch above the cutting line. Grab the torch over this spot till that it becomes bright red in color. Now press the cutting lever and open slowly and steadily oxygen cutting valve.

Cutting thick steel

For cutting steel of thickness more than 1/8 inch, hold the torch tip in vertical position. Start the cutting from the plate edges and move the hand right to left.

A. Keep the preheat flames 1/16 to 1/8 inch away from the surface of metal. Keep the torch over the spot till that metal heats and becomes cherry red in color.

B. For fast oxidation moves the torch slowly, even if partial cutting is doing.

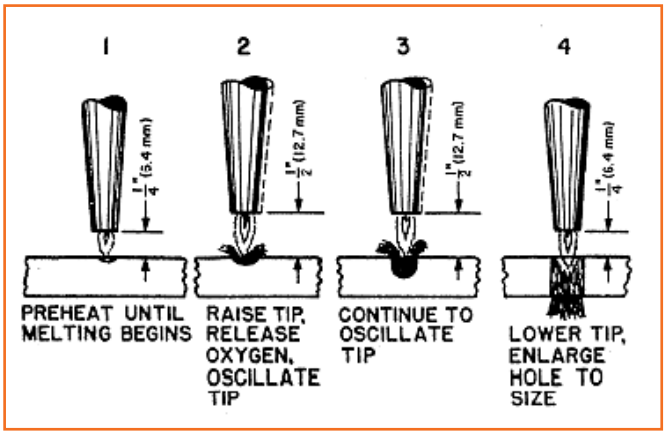

Fig 8.4.1: *Piercing a hole with an oxy-gas cutting torch*

C. If cutting whole thickness; the kerf bottom falls behind the top edge marginally.

Cutting cast iron

Cutting cast iron is harder the steel. In cast iron, oxides of cast iron require higher temperature for melting than cast iron. To avoid stress fractures, preheat the entire casting before starting the cut. Don't heat the casting at too high temperature, because sheet surface will get oxidize and cutting become more troublesome. A preheat temperature of around 500°F is usually acceptable.

Move the torch in semi-circle shape along the cutting line. When metal melts, start the cutting oxygen stream to blow out the molten metal from the kerf. Perform the action repeatedly till the cut is complete.

Gouging mild steel

If the gouging cut is not started properly, it is possible to cut accidently through the entire thickness of

the plate. If you cut too shallow, you can cause the operation to stop. The travel speed of the torch along the gouge line is important. Moving too fast creates a narrow, shallow gouge and moving too slow creates the opposite; a deep, wide gouge.

Beveling mild steel

Beveling can be done on plate or sheet to formation of joints for welding. For a 2-inch steel plate, cut around 2.8 inches of metal at an angle of 45 degrees to make bevel cut. Consider this while choosing the tip and altering the pressure. For straight cut, use low speed and high pressure.

Pipe cutting

There are two ways for doing the freehand cutting of pipes. For small diameter pipes (i.e. under 76 mm), hold the torch straight and move it up and down from centre to each side. For pipe of large diameter, point the torch tip toward the centre of the pipe. This method is likewise utilized on all sizes of substantial walled pipe and be able to be utilized on a few littler pipe dimension.

Hold the torch always like it is parallel to center line of cut. This helps to make the cut in square shape.

Demonstrate

Procedure for piercing holes in steel plate

Step1: Place the steel plate on the suitable support.

Step2: Hold the torch around 1/4 inch over the surface of the plate or on the location of hole.

Step3: Hold the torch till that a small red hot spot is not appears.

Step4: At that moment unlock the cutting oxygen valve bit by bit, and in the meantime, lift the nozzle marginally far from the plate and rotate the torch in spiral position.

Step5: Now slag has been move out of the hole. Wear proper PPE to avoid any harm from the slag.

Procedure of removing a rivet head

Step1: Use correct pressure of oxygen and torch tip size required for cutting the rivet.

Step2: Start heating rivet head till it becomes bright red.

Step3: The surface of the plate and the tip should be parallel to each other for which you need to move the tip and switch on the cutting oxygen gradually.

Step4: Incise an opening in the rivet head similar to the screwdriver slot in screw. When cut reaches near the plate, move back the nozzle little from rivet head to avoid cutting in plate.

Step5: Swing the torch tip through small arc for cutting the half rivet head.

Step6: Again swing the torch tip in other tip to cut other half of rivet head.

Do

- Plate that is properly cut can be assembled and welded with little or no post-cut clean-up.
- All cutting should be set up so the flame and oxygen stream runs between the support bars or over the edge of the table.
- The torch must be held in an exact position.
- The torch body should be held so that it is parallel to the centre line of the pipe. Holding the torch parallel helps to keep the cut square.

Don't

- Do not heat the casting to a temperature that is too high, as this will oxidize the surface and make cutting more difficult

Ask

- You could ask the purpose of fusible plugs on an acetylene cylinder
- You could ask about which lubricant(s) should be used when connecting the parts of an oxy fuel gas welder.
- You could ask to explain the position of torch tip for starting a cut
- You could ask about the gauging mild steel
- You could ask about the various types of guides used to guide the torch
- You could ask why the cutting torch is a valuable tool for piercing holes in steel plate.

Activity

- Conduct a skill practice activity.
- Ask the students to assemble together.
- Explain the purpose and duration of the activity.
- Set guidelines pertaining to discipline and expected tasks.

Skill Practice	Time	Resources
Remove a rivet head	1 hour	Cutting torch and oxy-fuel gas setup
		Workpiece

Do

- Ask them to get into pairs for practice.
- Go around and make sure they are doing it properly.

Notes for Facilitation

- Summarize the main points.
- Ask participants if they have any doubts.
- Encourage them to ask questions.
- Answer their queries satisfactorily.

UNIT 8.5: Quality check

Unit Objectives

At the end of this unit, students will be able to:

1. About oxy-fuel gas cutting quality check

Resources to be used

- Available objects such as black or white Board, chalk pieces or white board marker pens, duster, Participant manual.
- PC with LCD Projector or Flip chart

Do

- Welcome and greet the participants. Revise the learnings of the previous sessions and ask them if they have any doubts.

Say

- To know how good of a cutting job you are doing, you must understand know what constitutes a good oxy-gas cut.
- The quality of an oxy-gas cut is judged by four characteristics:
  - The shape and length of the draglines
  - The smoothness of the sides
  - The sharpness of the top edges
  - The amount of slag adhering to the metal

Elaborate

1. **Drag lines:** Line markings visible on the surface of cut are drag lines. Straight drag lines are good but poor drag lines are long, unpredictable and bended. This kind of drag lines make poor cutting which brings the cut loss. To check quality of cut, draglines are the finest single sign created by an oxy-gas torch. Slag circumstances are agreeable when the draglines are short and vertical, have smooth sides and sharp top edges.

2. **Side smoothness:** An acceptable oxy-gas cut shows smoothness in sides. A fluted, grooved or worn out cut is an indication of low quality.
3. **Top edges sharpness:** The top edges come out because of square and sharp oxy-gas cut. Rounded top edges are not acceptable. The top edges melting could occur because of erroneous preheating systems or moving the cutting torch too gradually.
4. **Slag conditions:** An oxy-gas cut cannot be acceptable wherein slag sticks so firmly with the metal that it becomes hard to evacuate.
5. **Distortion:** Distortion is the point at which the metal twists or bends because the metal gets heated during the cutting procedure. This is a noteworthy issue while doing plate cutting. On the off chance that the twisting is not controlled, the final result may be useless. There are two noteworthy strategies for controlling bending.
   a. One strategy includes making two corresponding cuts on a similar plate at a similar rate and moment. Distortion is kept at the base if the plate is heated uniformly.
   b. The other technique includes begin the cut from the edge of the plate to a small distance, then skip short tabs of 0.6 m to 0.9 m distance each to shield the cut from isolation. Once plate cool down, cut the rest of the tabs.

Demonstrate

- You could demonstrate the major methods of controlling distortion

Ask

- You could ask the characteristics of the quality of an oxy-gas cut are judged.
- You could ask about the drag lines.

Notes for Facilitation

- Summarize the main points.
- Ask participants if they have any doubts.
- Encourage them to ask questions.
- Answer their queries satisfactorily.

UNIT 8.6: Safety practices during oxy-fuel gas cutting

Unit Objectives

At the end of this unit, students will be able to:

1. Know about hazards during oxy-fuel gas cutting
2. Know about fire prevention during oxy-fuel gas cutting
3. Know about backfire and flashback

Resources to be used

- Available objects such as black or white Board, chalk pieces or white board marker pens, duster, Participant manual.
- PC with LCD Projector or Flip chart

Do

- Welcome and greet the participants. Revise the learnings of the previous sessions and ask them if they have any doubts.

Say

- Oxy-fuel gas setup has much utilization - welding, heating, cutting and descaling. Its setup is cheap, flexible and simple to shift.
- Oxy-fuel gas is very broadly utilized that occasionally people don't remember regarding the risks. Many accidents occur every year due to improper utilization of oxy-fuel gas equipments.
- You need to follow preventive measures while using oxy-fuel gas cutting setup to avoid hazards.
- When the fire reverse back in the torch and burst with a sharp blast; is known as backfire. When the nozzle is blocked partially or torch is held very near to workpiece, then chances of backfire generate.
- Flashbacks are usually source by a reverse run of oxygen into the fuel gas hose, and generate an explosive blend inside the hose. The flame would then be able to consume back all the way through the torch, into the hose and can reach in cylinder and regulator.

Elaborate

The main hazards are:

- Fire caused by melted metal, flashes, heat or get in touch with the fire straight;
- Blast while cutting or fixing tanks or drums;
- Fire/blast occurred due to gas leakage, flashbacks and backfire;
- Fumes made throughout flame cutting;
- Fire/burns coming about because of misuse of oxygen;
- Burns due to get in touch with hot metal;
- When transporting cylinders, crush or impact wounds.

The accompanying safety measures will help avoid fire:

- Shift the material in a protected area for completing hot work;
- Eliminate adjacent ignitable resources, (for example, combustible fluid, wood, paper, materials, bundling or plastics);
- Guard adjacent flammable supplies which can't be shifted. Utilize appropriate protects or wrap, for example, metal sheeting, mineral fiber sheets or fire-retardant covers;
- Make sure so as to there are no ignitable supplies holed up at the back of the walls or in partition, especially if the welding or cutting would continue for quite a while. Some divider boards contain flammable protection materials, e.g. polystyrene;
- Use fire safe sheets or covers to avert hot particles going all the way through opening in floors and dividers (entryways, windows, link runs, and so on);
- If the fire results are serious, appoint a watchman for fire watch at workplace. When hot work completes, keep the fire watch for at least 30 minutes.
- Secure hoses from the fire, sparkles or hot splash from;
- Keep fire extinguishers adjacent.

Backfires

Backfires don't cause any wound or harm, however this could show an error in the tool.

When a backfire occur:

- shut off the torch valves, firstly oxygen valve and after that fuel gas valve;
- close fuel gas and oxygen cylinder valves;
- Use water for cool down the blowpipe;
- Check all equipments for any damage.

Flashbacks

Flashbacks may bring about harm or decimation of hardware, and could even make the cylinder detonate.

The accompanying precautionary measures will avoid flashbacks:

- Utilize the correct illuminating strategy. Clean the hoses prior to illuminating the torch to expel any conceivably hazardous gas combination. Utilize a spark igniter and light the gas rapidly when it starts.
- Ensure that blowpipe is joined with spring stacked non return valves.
- Utilize right nozzle dimension and gas pressure.
- Preserve the equipment in fine quality state.

Ask

- You could ask the hazards during oxy-fuel gas cutting.
- You could ask about the backfire and flashback.
- You could ask from the students about the combustible material.
- You could ask the precaution of prevent fire.

Notes for Facilitation

- Summarize the main points.
- Ask participants if they have any doubts.
- Encourage them to ask questions.
- Answer their queries satisfactorily.

Notes

Skill India
कौशल भारत-कुशल भारत

सत्यमेव जयते
GOVERNMENT OF INDIA
MINISTRY OF SKILL DEVELOPMENT
& ENTREPRENEURSHIP

N·S·D·C
National
Skill Development
Corporation
Transforming the skill landscape

INDIAN IRON & STEEL SECTOR SKILL COUNCIL

9. Reporting and Documentation

Unit 9.1 – Documentation for health and safety

Unit 9.2 - Documentation of defects

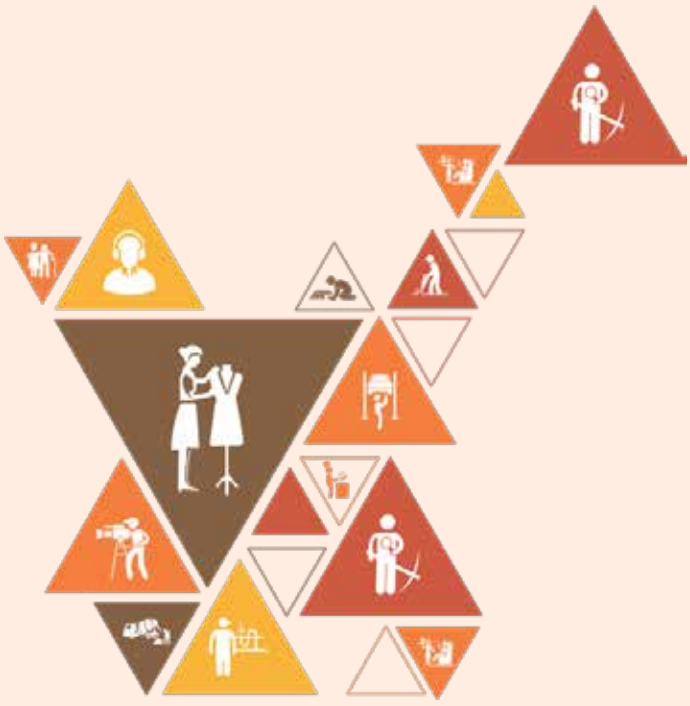

ISC/N0008

Key Learning Outcomes

At the end of this module, students will be able to:

1. Know about reporting and documentation requirements
2. Know about accident reporting
3. Know about reporting of defective tools

UNIT 9.1: Documentation for health and safety

Unit Objectives

At the end of this unit, you will be able to:

1. Discuss about accident and incident reporting
2. Know about how to write reports properly
3. Know about how to escalate the issues properly

Resources to be used

- Available objects such as a duster, pen, notebook etc.

Do

- Welcome and greet the participants. Revise the learnings of the previous sessions and ask them if they have any doubts.

Say

- It is of utmost importance to inform about the accidents and incidence straightaway, irrespective of the impact of it.
- Hazard reports can take a number of different forms:
  - the standard hazard report used by workers for all hazards
  - reports of infections
  - near-miss incident reports
  - reports of damage and faulty tools, equipments and machines
  - routine inspection reports
  - Behavior incident reports.
- Reporting of incidents and accidents is required under the Work Health and Safety (WHS) legislation
- Always report an accident to management immediately. There should be a form at each workplace that you (or the person involved) and any witnesses can fill out, where possible, otherwise it can be completed by a health and safety representative (HSR) if necessary.

Elaborate

The form should cover the following areas:

- Description of the occurrence – what was the event that occurred, which required this report to be completed?
- Nature of injury or disease – select the most appropriate description from a range of options.
- What injury or disease happened as a result of the occurrence?
- First aid, medical treatment or hospital admission – this section asks for a description of what was done to treat the injury or disease.
- Part of the body affected – tick off which part or parts of the body were affected as a result of the occurrence.
- Source of injury – what actually caused the person to be injured or acquire a disease? This could be a piece of machinery or other hazardous materials for example.
- Probable cause or causes of injury – how was the source listed above actually responsible for the injury?
- Investigation – this asks a series of questions that seek to find out why the person has been injured or has acquired a disease.
- Notification checklist – this checklist makes sure that everyone who should have been contacted regarding the matter has been contacted and asks whether appropriate action has been taken by the authorities.
- Preventative action – this asks whether or not any action has been taken to prevent the occurrence from happening again.
- Witness details – this part is to be filled out if someone saw the occurrence happen. It is essential if any sort of legal action is to be taken.

Ask

- You could ask the areas covered in form
- You could ask the suggestions for completing appropriate report

Notes for Facilitation

- You could ask the students why reporting and documentation is necessary.
- You could ask from the students about the important things to remember filling reports and documents.
- Assume you got an accident at work place on your knees. File a report and inform the management about the accident.

Activity

- Conduct a skill practice activity.
- Ask the students to assemble together.
- Explain the purpose and duration of the activity.
- Set guidelines pertaining to discipline and expected tasks.
- Make the fire accident report

Skill Practice	Time	Resources
Fire accident report	1 hour	Checklist

Do

- Ask them to get into pairs for practice.
- Go around and make sure they are doing it properly.
- Wrap the unit up after summarizing the key points and answering questions.

UNIT 9.2: Documentation of defects

Unit Objectives

At the end of this unit, students will be able to:

1. Know about reporting of faulty and damage tools

Say

- Like accident or incident reporting, reporting of faulty and damaged machine, tools and equipments is also necessary.
- Any damaged, faulty or malfunctioning tools, equipment should be immediately withdrawn from use and addressed according to organizational policies and procedures
- You should have to check the following details before doing reporting or providing any repair suggestions:
  - Last date of inspection
  - Last date of repair and which part was repaired.
  - Life cycle of the tool, equipment or machine

Elaborate

In machine or equipment faulty or damage report you have to provide following details:

- Name of the tool or machine
- Registration details of machine
- Who does the inspection of toll and machine before the use
- Trouble or hazard from the defective tool or machine
- Defective part name or number
- Remedial action - Tool or machine has to be discontinue or need repair
- Which process is going to affect due to the faulty machine or tool
- Report whether the machine or tool is performing accurately or precisely.
- Report that there limits, fits and tolerances are set or not according to industrial standards.

Ask

- You could ask the details before doing reporting or providing any repair suggestions
- You could ask the details which are to be required In machine or equipment faulty or damage report

Notes for Facilitation

- Summarize the main points.
- Ask participants if they have any doubts.
- Encourage them to ask questions.
- Answer their queries satisfactorily.

Notes

Skill India
कौशल भारत-कुशल भारत

सत्यमेव जयते
GOVERNMENT OF INDIA
MINISTRY OF SKILL DEVELOPMENT
& ENTREPRENEURSHIP

N·S·D·C
National Skill Development Corporation
Transforming the skill landscape

INDIAN IRON & STEEL SECTOR SKILL COUNCIL

10. Problem identification and escalation

Unit 10.1 – Risk management

Unit 10.2 – Escalation matrix

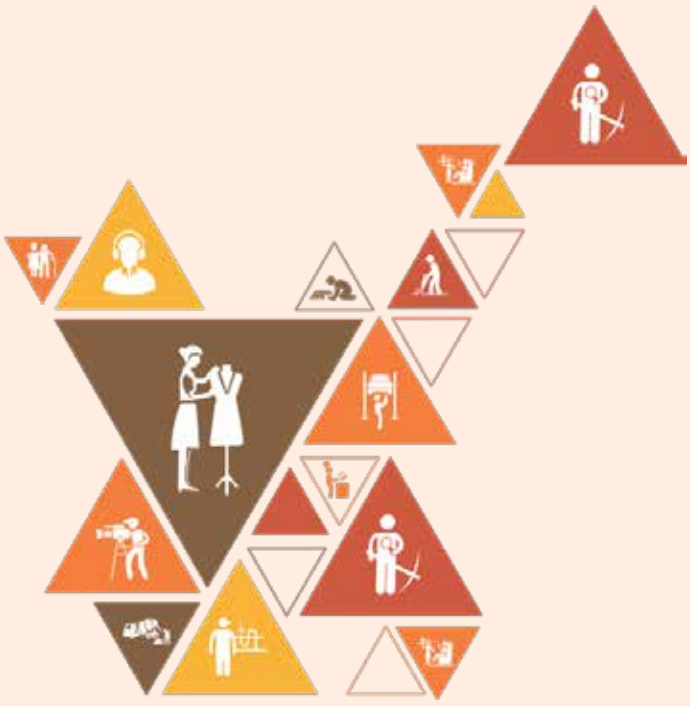

ISC/N0008

Key Learning Outcomes

At the end of this module, students will be able to:

1. Know about identification of problem
2. Know about risk management process
3. Know about escalation matrix and problem escalation process

UNIT 10.1: Risk Management

Unit Objectives

At the end of this unit, you will be able to:

1. Discuss about risk management process
2. Know about inspecting controlling and controlling the problems

Resources to be used

- Available objects such as a duster, pen, notebook etc.

Do

- Welcome and greet the participants. Revise the learnings of the previous sessions and ask them if they have any doubts.

Say

- Risk Management consists of methodical steps for handling hazards in the workplace.
- One major component of risk management is workplace safety inspections. Inspections are a major tool in ensuring that a workplace remains safe.

Elaborate

One major component of risk management is Workplace Safety Inspections. Inspections are at major tool in ensuring that a workplace remains safe. They help to identify and address new problems or unsafe conditions. Do the inspection according to the inspection checklist made by the organization according to their norms and standards.

After inspection, make an inspection report, which includes the following information:

1. Fill in the name of the area inspected if not already indicated on the sheet, the date and inspectors' names in the area provided. Make sure all pages are attached and kept together with the front page.

2. Check either yes or no according to the situation or item listed, or put a check next to each listed control. If you can't check off the presence of a control, or answer no to any of the questions, this indicates action is needed. To better prioritize action, evaluate the hazard's severity.
3. Record suggested remedial action in the comments for the identified action items. State what needs to be or should be done to correct and better control the hazardous situation.

Demonstrate

- Explain the benefits of workplace inspection.
- Demonstrate the process of risk assessment

Steps – Risk assessment

Risk management is the process of:

Fig 10.1.1: *Risk management process*

Step 1: **Identifying** any anticipated problem – Anything that could lead to any harm to any person in the work place, e.g. machine moving, poisonous chemicals, and jobs requiring physical interference.

Step 2: **Evaluating** the issues – Assessing the problem on the basis of their impact, e.g. can it cause a severe injury, sickness or fatality and how likely is this to take place?

Step 3: **Control** the problem or if it's not feasible, controlling the threat arising out of the problem – putting in to practice such strategies that can eradicate or manage the problem, e.g. designing

the equipments differently, putting in machine guards at place, using harmless chemicals, placing heavy objects lifting equipments to reduce manual weight lifting or PPE or inform to supervisor or seniors.

Step 4: **Analyzing** risk evaluation - to keep a check on control measures and adding better control measures. Also need to discover secure ways of doing things.

Ask

- You could ask how to control the problems
- You could ask from the students risk management process

Notes for Facilitation

- You could ask the students what are the important information make an inspection report

Activity

- Conduct a skill practice activity.
- Ask the students to assemble together.
- Explain the purpose and duration of the activity.
- Set guidelines pertaining to discipline and expected tasks.
- Make the checklist of inspection according to norms and standards and Conduct the inspection of workplace

Skill Practice	Time	Resources
Inspection	1 hour	Checklist

Do

- Ask them to get into pairs for practice.
- Go around and make sure they are doing it properly.
- Wrap the unit up after summarizing the key points and answering questions.

UNIT 10.2: Escalation Matrix

Unit Objectives

At the end of this unit, you will be able to:

1. Discuss about problem management process
2. Know about escalation matrix

Resources to be Used

- Available objects such as black or white Board, chalk pieces or white board marker pens, duster.
- PC with LCD Projector or Flip Chart
- Participant Manual

Do

- Welcome and greet the participants. Revise the learnings of the previous sessions and ask them if they have any doubts.

Say

- For escalating issues to the concerned department, every organization follows a specific procedure. This procedure is based on escalation matrix.
- Escalation matrix is a complaint logging system (complaint box) allows you to specify multiple user contacts to be notified in the event of issues.
- By using escalation matrix you can notify the right people at the right time about critical alerts irrespective of the business hours. The escalation matrix is time zone specific and it is available 24X7.

Elaborate

- **Key features of escalation matrix are as follows:**
  - The escalation levels are based on schedules.
  - The service is available 24X7 and schedules are allocated accordingly.

- The schedules are ¬me zone specific.
- A matrix can be defined at multiple levels ranging from senior management to lower management.

Problem management process

1. Identify problems as described earlier
2. Logging problems – Log the complaint report to the concerned person via email or procedure specified by organization.
3. Categorize problems – categorize the problems into hazards, accidents, faulty tools or equipments and general problems.
4. Prioritization of problem – prioritize the problem according to its impact or severity into high, low, moderate and critcal.
5. Initially diagnosis the problem and collect data and information regarding that.
6. Escalate the problem to the management through the escalation procedure.
7. Review the remedial action taken by the management to resolve the situation
8. If found any problem again, then notify the management again about the problem and also suggest the remedial action required for it.
9. Close the complaint after solution of problem.

Demonstrate

- Explain the benefits of workplace inspection.
- Demonstrate the process of risk assessment

Steps - Escalation Matrix

Step 1: Complaint of a given category will by default be assigned and notified by email to the Level 1 department of that category.

Step 2: It defines which an issue has to be raised to whom and within which time frame.

Step 3: If the complaint is not resolved within X number of days (X is the time defined for Level 1 department to resolve the issue), the complaint will be escalated to Level 2 department.

Step 4: If the complaint is not resolved within Y number of days (Y is the time defined for Level 2 department to resolve the issue), the complaint will be escalated to Level 3 department.

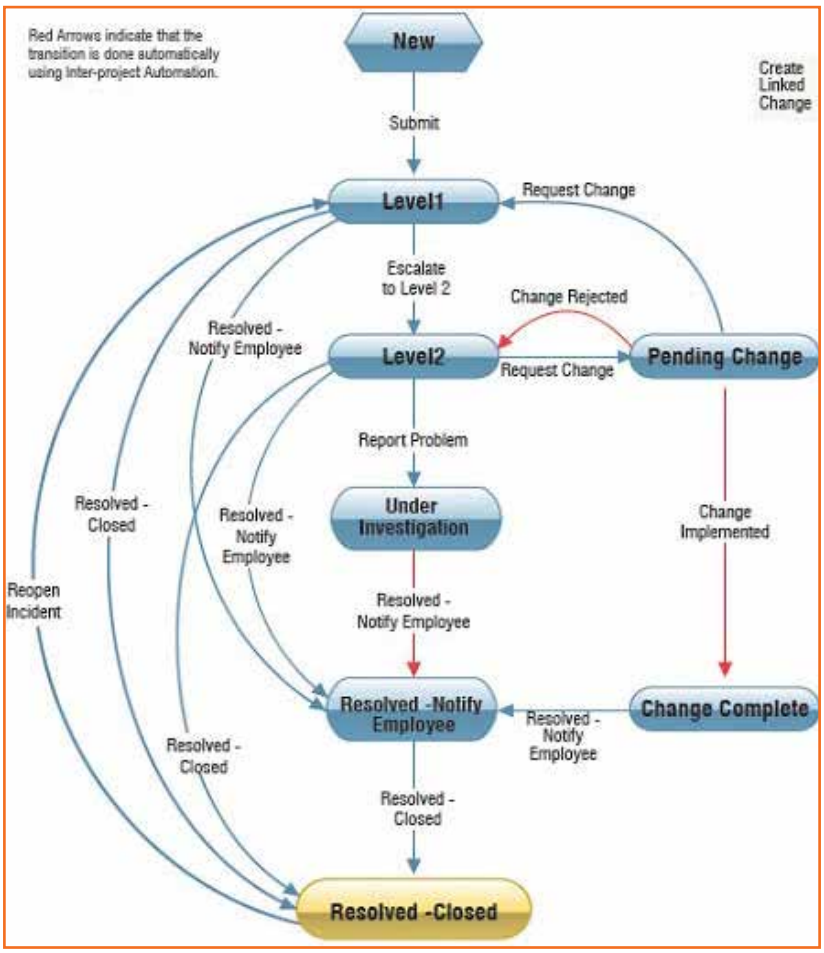

Fig 10.2.1: *Escalation matrix*

Ask

- You could ask what is escalation matrix and its features
- You could ask the process of problem management
- You could ask how does escalation matrix work for complaints

Notes for Facilitation

- Summarize the main points.
- Ask participants if they have any doubts.
- Encourage them to ask questions.
- Answer their queries satisfactorily.

Skill India
कौशल भारत-कुशल भारत

सत्यमेव जयते
GOVERNMENT OF INDIA
MINISTRY OF SKILL DEVELOPMENT
& ENTREPRENEURSHIP

N·S·D·C
National
Skill Development
Corporation
Transforming the skill landscape

INDIAN IRON & STEEL SECTOR SKILL COUNCIL

11. Work effectively with others

Unit 11.1 – Ensure appropriate communication with others

Unit 11.2 – Workplace etiquettes

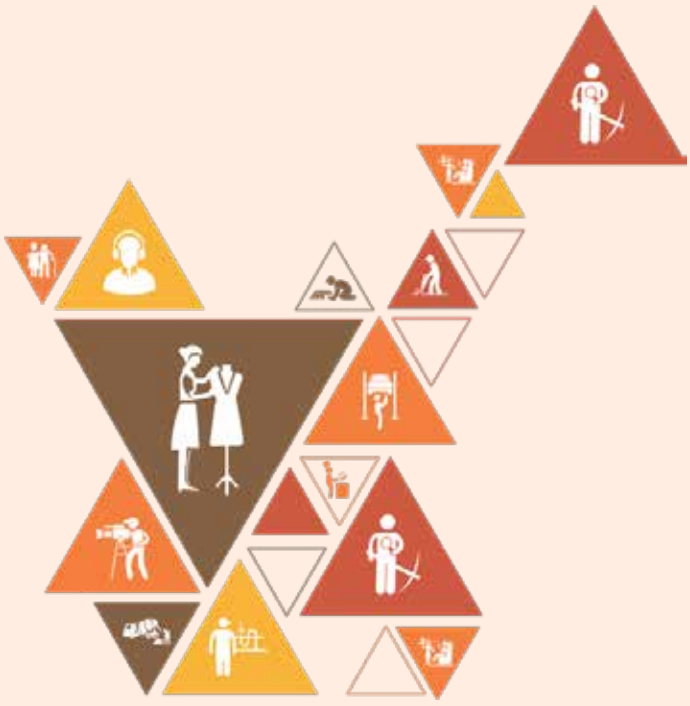

ISC/N0009

Key Learning Outcomes

At the end of this module, students will be able to:

1. Know about effective communication with colleagues
2. Know about workplace etiquettes

UNIT 11.1: Ensure appropriate communication with others

Unit Objectives

At the end of this unit, you will be able to:

1. Know about how to communicate effectively with colleagues
2. Know about effective communication

Resources to be used

- Available objects such as a duster, pen, notebook etc.

Do

- Welcome and greet the participants. Revise the learnings of the previous sessions and ask them if they have any doubts.

Say

- The success of the organization depends on each colleague.
- For success of organization learn your co-workers' names and learn them quickly because people loves hear their names.
- It doesn't matter a person is more or less significant because of his/her designation. You should respect every employee.

Notes for Facilitation

- You could ask the students what are the ways of effective communication with colleagues

Team Activity

- Conduct a skill practice activity.
- Ask the students to assemble together.
- Explain the purpose and duration of the activity.
- Set guidelines pertaining to discipline and expected tasks.

Skill Practice	Time	Resources
Effective communication between 2 persons	1 hour	Communication tools

Do

- Ask them to get into pairs for practice.
- Go around and make sure they are doing it properly.
- Wrap the unit up after summarizing the key points and answering questions.

UNIT 11.2: Workplace Etiquettes

Unit Objectives

At the end of this unit, you will be able to:

1. Know about organization policies and procedures
2. Know about workplace etiquettes

Say

- Workplace etiquettes are also important aspect of organization policies and procedures.
- Work station should be professional and well-ordered with suitable private touches! It reflects good impression on the team mates.
- Make a Positive impression, cooperate with colleagues and work space savvy are some important tips to help you succeed on the job.
- Work station should be professional and well-ordered with suitable private touches! It reflects good impression on the team mates.

Elaborate

Organization policies and procedures while working with colleagues:

- Never use abusive words with the colleagues
- Follow work etiquettes
- Never share secret or confidential information with your colleagues
- Help your colleague in case of emergency or difficult situations
- Coach your colleagues in case of problems and about organization policies and procedures.
- Communicate with them properly.

Notes for Facilitation

- You could ask the role of colleagues in the success of the organization
- You could ask the students how to make a good impression on the job

Notes

Skill India
कौशल भारत-कुशल भारत

सत्यमेव जयते
GOVERNMENT OF INDIA
MINISTRY OF SKILL DEVELOPMENT
& ENTREPRENEURSHIP

N·S·D·C
National Skill Development Corporation
Transforming the skill landscape

INDIAN IRON & STEEL SECTOR SKILL COUNCIL

12. Employability & Entrepreneurship Skills

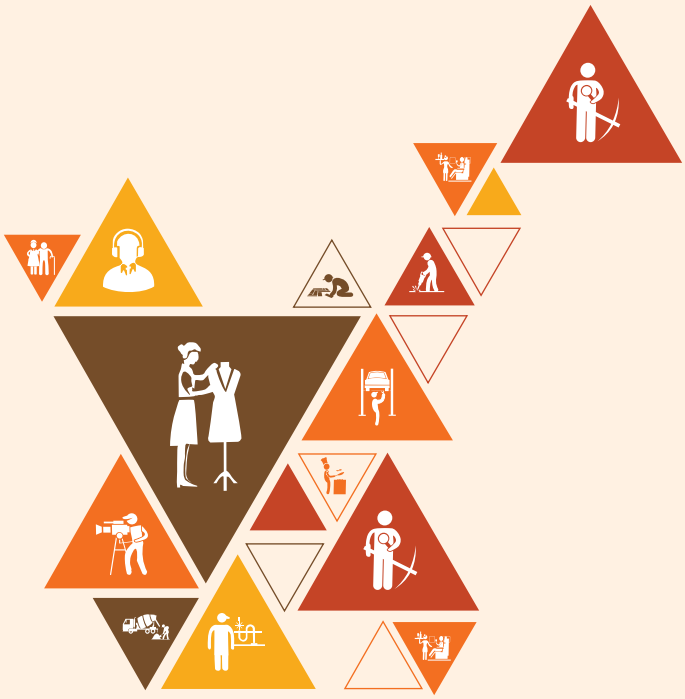

Introduction: Employability and Entrepreneurship Skills

This Facilitator's guide includes various activities which will help you as a facilitator to make the sessions participative and interactive.

Ice breaker

- You can begin the module with the following ice breaker:

Five of Anything Ice Breaker Steps:

- Divide the participants into groups of four or five by having them number off. (You do this because people generally begin a meeting by sitting with the people they already know best.)
- Tell the newly formed groups that their assignment is to share their five favourite movies of all time, their five favourite novels or their five least liked films. The topic can be five of anything - most liked or disliked.
- This ice breaker helps the group explore shared interests more broadly and sparks lots of discussion about why each person likes or dislikes their selected five.
- Tell the groups that one person must take notes and be ready to share the highlights of their group discussion with the class upon completion of the assignment.

Expectation Mapping

1. During the first session and after ice breaker session, ask the participants to answer the following question: "What do I expect to learn from this training?"
2. Have one of the participants write their contributions on a flip chart sheet.
3. Write down your own list of covered material in the training on another flip chart sheet.
4. Compare the two sheets, commenting on what will and what will not be covered during the training.
5. Set some ground rules for the training sessions. Ask the participants to put these rules on a flipchart and display it in the class.
6. You may get back to those sheets once again at the end of the last session of the training.
7. Benefits of doing this activity:
   - Participants feel better as their opinions are heard.
   - Participants get to know what they should expect from the training.
   - The facilitator gets to know which points to emphasize, which to leave out, and which to add during the training.
8. Expectations from the participants:
   - Must sign the attendance sheet when they arrive for class.
   - Conduct themselves in a positive manner
   - Be punctual, attentive, and participative
9. Explain the contents that are going to get covered one by one and connect it with the expectation mapping done earlier.
10. By the end of this exercise, the participants should have a clear understanding of what to expect from the session and what are the areas that will not get covered.

Defining Objectives

1. Defining the objectives in the beginning of the units sets the mood for the unit.
2. To begin with the end in mind sets the expectations of the participants as what could be the important takeaways from the session.
3. It is also a way of making participants take responsibility of their own learning process.
4. For the facilitator, the objectives decide a designed path to progress on so that the learning stays aligned and on track.

5. Read the objectives slowly, one by one, and ask the participants to explain what they think it means.
6. At the end of the session, you could again revisit the objectives to find out from the participants about how many objectives have been achieved.

In order to effectively facilitate this workshop:

1. You must have thorough knowledge of the material in the Participant Handbook, and be prepared to answer questions about it.
2. You may also wish to read other material to enhance your knowledge of the subject.
3. There may be issues raised with which you are not able to deal, either because of lack of time or knowledge. You can either state that you will obtain answers and get back to the participants with the information. Incase the query can be turned to an assignment to the class, do so. You can work with the the participants on the assignement.
4. You must have a very clear understanding of what the participants want to accomplish by the end of the workshop and the means to guide the participants.
5. As the facilitator, it is your responsibility to make sure that all logistical arrangements are made for the workshop. This may involve doing it yourself or confirming that someone else has made all necessary arrangements associated with the workshop. Assume nothing and check everything before the workshop begins.
6. To break the monotony and boredom during sessions, introduce mini breaks in the form of stretching exercises, jokes, some group songs or games.
7. Invite discussion from the participants.
8. Probe the participants further and lead them to come to affirmative conclusions.
9. Let the participants answer. No answer is incorrect.
10. Ask one participant to write all the points on the whiteboard.
11. Build the sessions from the answers provided by the class.
12. Prepare for the sessions in advance so that the resources like flipcharts, handouts, blank sheets of paper, marker pens, etc. can be kept ready.
13. Ensure that resources like board, markers, duster etc. is available before your session starts.

General instructions for role playing:

1. You are not being asked to be an actor or to entertain. The purpose of the role play is to provide a situation in which you can practice certain skills.
2. When you read the brief, try to imagine yourself in the situation described and behave in a way you feel to be natural – but be conscious of the fact that your role may require a different approach from that which you might normally use.
3. You (and others) may benefit from the change in approach and behaviour. Therefore, try to use the approach you feel to be most appropriate for the circumstances described in your brief.
4. The brief is just the starting point. It simply sets the scene and the tone of session or activity. Try not to keep referring to the brief as this will affect the spontaneity of the meeting. Allow the role play to develop as you think it might in real life and change your reactions in line with the behaviour and responses of others involved.
5. If you find that you have too little information to answer questions or to describe what has happened in the situation, do feel free to add your own thoughts and ideas. Try to keep these within the framework of the role you are taking and try to make your improvisations as realistic as possible.

UNIT 12.1: Personal Strengths & Value Systems

Key Learning Outcomes

At the end of this unit, participants will be able to:

1. Explain the meaning of health
2. List common health issues
3. Discuss tips to prevent common health issues
4. Explain the meaning of hygiene
5. Discuss the purpose of Swacch Bharat Abhiyan
6. Explain the meaning of habit
7. Discuss ways to set up a safe work environment
8. Discuss critical safety habits to be followed by employees
9. Explain the importance of self-analysis
10. Discuss motivation with the help of Maslow's Hierarchy of Needs
11. Discuss the meaning of achievement motivation
12. List the characteristics of entrepreneurs with achievement motivation
13. List the different factors that motivate you
14. Discuss the role of attitude in self-analysis
15. Discuss how to maintain a positive attitude
16. List your strengths and weaknesses
17. Discuss the qualities of honest people
18. Describe the importance of honesty in entrepreneurs
19. Discuss the elements of a strong work ethic
20. Discuss how to foster a good work ethic
21. List the characteristics of highly creative people
22. List the characteristics of highly innovative people
23. Discuss the benefits of time management
24. List the traits of effective time managers
25. Describe effective time management technique
26. Discuss the importance of anger management
27. Describe anger management strategies
28. Discuss tips for anger management
29. Discuss the causes of stress
30. Discuss the symptoms of stress
31. Discuss tips for stress management

UNIT 12.1.1: Health, Habits, Hygiene: What is Health?

Unit Objectives

At the end of this unit, participants will be able to:

- Explain the meaning of health
- List common health issues
- Discuss tips to prevent common health issues
- Explain the meaning of hygiene
- Discuss the purpose of Swachh Bharat Abhiyan
- Explain the meaning of habit

Resources to be Used

- Participant Handbook

Ask

- What do you understand by the term "Health?"
- According to you, who is a healthy person?

Say

- Discuss the meaning of health and a healthy person as given in the Participant Handbook.

Ask

- When did you visit the doctor last? Was it for you or for a family member?

Say

- Discuss the common health issues like common cold, allergies etc. Refer to the Participant Handbook.
- Let us do a small activity. I will need some volunteers.

Role Play

- Conduct a small skit with volunteers from the class. Consider one of the villagers has been appointed as a health representative of the village, what measures will you as a health representative suggest to the common villagers to prevent common health issues discussed.
- You will need at least 4 volunteers (Narrator, Health Representative, Head of the Village, Doctor).
- Explain the health concerns of the village to the Narrator. The Narrator will brief the class about the skit.
- Give the group of volunteers, 5 minutes to do discuss.
- At the end of 5 minutes, ask the group to present the skit to the class assuming them as the villagers.
- The class can ask questions to the group as a common villager.

Summarize

- Through this activity we got some tips on how can we prevent these common health issues.

Say

- Let us now see how many of these health standards we follow in our daily life.

Activity

- Health Standard Checklist from the Participant Handbook.

Ask

- How many of you think that you are healthy? How many of you follow healthy habits?

Say

- Let's do an exercise to find out how healthy you are.
- Open your Participant Handbook section 'Health, Habits, Hygiene: What is Health?', and read through the health standards given.
- Tick the points which you think are true for you.
- Try to be as honest as possible as this test is for your own learning.

Do

- Ensure that all the participants have opened the right page in the Participant Handbook.
- Read aloud the points for the participants and explain if required.
- Give them 5 minutes to do the exercise.
- At the end of 5 minutes, ask the participants to check how many ticks have they got.

Summarize

- Tell them that they need to follow all the tips given in this checklist regularly in order to remain healthy and fit.

Ask

Discuss:

- Is it necessary to practice personal hygiene every day? Why?
- How does a person feel when they do not practice good personal hygiene? Why?
- Can good personal hygiene help a person feel good about his/her self? How?

Say

- Discuss the meaning of hygiene as given in the Participant Handbook.

Activity

- Health Standard Checklist: Hygiene

Say

- Let's do an exercise to find out if we maintain good hygiene habits or not.
- Open the Participant Handbook and read through the Health Standard checklist given.
- Tick the points which you think are true for you.
- Try to be as honest as possible as this test is for your own learning.

Do

- Ensure that all the participants have opened the right page in the Participant Handbook.
- Read aloud the points for the participants and explain if required.
- Give them 5 minutes to do the exercise. .
- At the end of 5 minutes, ask the participants to check how many ticks have they got.
- Ask them to calculate their score.
- Tell them what each score indicates by reading aloud what has been mentioned in the Participant Handbook.

Ask

- How many of you have heard about "Swachh Bharat Abhiyan"?
- Can you tell the class what it is about?

Summarize

- Tell them about Swachh Bharat Abhiyan as given in the Participant Handbook and request them to take a pledge to keep our country clean.

Ask

- What is a habit?

Say

- Discuss some good habits which can become a way of life.

Summarize

- Tell them about good and bad habits and the reasons to make good habits a way of life.

UNIT 12.1.2: Safety

Unit Objectives

At the end of this unit, participants will be able to:

- Discuss ways to set up a safe work environment
- Discuss critical safety habits to be followed by employees

Resources to be Used

- Participant Handbook
- Safety signs and symbols
- Safety equipments
- Blank papers
- Pens

Say

- There are many common safety hazards present in most workplaces at one time or another. They include unsafe conditions that can cause injury, illness and death.
- Safety Hazards include:
  - Spills on floors or tripping hazards, such as blocked aisles or cords running across the floor.
  - Working from heights, including ladders, scaffolds, roofs, or any raised work area.
  - Unguarded machinery and moving machinery parts; guards removed or moving parts that a worker can accidentally touch.
  - Electrical hazards like cords, missing ground pins, improper wiring.
  - Machinery-related hazards (lockout/tag out, boiler safety, forklifts, etc.)

Team Activity

Safety Hazards

- There are two parts to this activity.
- First part will cover the potential safety hazards at work place.
- Second part will cover a few safety signs, symbols and equipments at work place.
- Use this format for the first part of the activity.

PART 1		
Hazard	**What could happen?**	**How could it be corrected?**

Ask

- How could you or your employees get hurt at work?

Say

- Let's understand it better with the help of an activity. You will be given a handout within your groups. You have to think about the possible hazards of your workplace, what damage these hazards could cause and about the corrective action.

Do

- Divide the class into five to six groups of four participants each.
- Put the format on the board for the activity.
- Give blank papers and pens to each group.
- The group is expected to think and discuss the potential safety hazards in the workplace.
- Ask the group to discuss and fill the format using the blank sheet.
- Give the groups 5 minutes for the activity.
- For the second part of the activity, show the class some pictures of safety signs, symbols and equipments.
- Now they will put down a few safety symbols, signs or equipment against the safety hazards identified.
- Give them 5 to 10 minutes to discuss and draw/note it.
- At the end of 10 minutes the groups will present their answers to the class.

Say

- Now, let's discuss the answers with the class.
- All the groups will briefly present their answers.

Do

- Ask the audience to applaud for the group presentation.
- Ask de-brief questions to cull out the information from each group.
- Keep a check on time.
- Tell the group to wind up the discussion quickly if they go beyond the given time limit.

Ask

De-briefing

- What did you learn from the exercise?
- As an entrepreneur, is it important to ensure the safety of your employees from possible hazards? Why?

Summarize

- Ask the participants what they have learnt so far.
- Ask if they have any questions related to what they have talked about so far.
- Close the discussion by summarizing the tips to design a safe workplace and non-negotiable employee safety habits.

UNIT 12.1.3: Self Analysis- Attitude, Achievement Motivation: What is Self Analysis?

Unit Objectives

At the end of this unit, participants will be able to:

- Explain the importance of self- analysis
- Discuss motivation with the help of Maslow's Hierarchy of Needs
- Discuss the meaning of achievement motivation
- List the characteristics of entrepreneurs with achievement motivation
- List the different factors that motivate you
- Discuss the role of attitude in self- analysis
- Discuss how to maintain a positive attitude
- List your strengths and weaknesses

Resources to be Used

- Participant Handbook
- Old newspapers
- Blank papers
- Pencils/ pens

Activity

- This is a paper pencil activity.

What are the three sentences that describe you the best?
What do you need to live happily?
What are your strengths and weaknesses?

Do

- Write the three questions on the board/ flipchart before the session begins.
- Give plain papers and pencils/ pens to each participant.
- Tell participants to write the answer for the three questions on the paper.
- Tell them the purpose of this activity is not to judge anyone but to understand more about self.

Say

- Discuss the concept of Self Analysis and motivation with reference to Maslow's Hierarchy of Needs as discussed in the Participant Handbook.

Team Activity

Tower building

- Each group which will create tower using the old newspapers.

Do

- Divide the class into groups.
- Give them some old newspapers.
- The task is to create a tower out of the newspapers.
- The group which will create the highest tower standing on its own will be considered the winning group.
- Groups can use as many newspapers as they want to and in any way they want.

Ask

- What did the winning group do differently?
- If you were given a chance, how would you have made the tower differently?
- How did you feel while making the tower?
- Did you feel motivated?

Say

- Discuss the concept of achievement motivation and characteristics of entrepreneurs with achievement motivation as discussed in the Participant Handbook.

Ask

- Is your attitude positive or negative?

Say

- Let me tell you a story :

It's Little Things that Make a Big Difference.

There was a man taking a morning walk at the beach. He saw that along with the morning tide came hundreds of starfish and when the tide receded, they were left behind and with the morning sun rays, they would die. The tide was fresh and the starfish were alive. The man took a few steps, picked one and threw it into the water. He did that repeatedly. Right behind him there was another person who couldn't understand what this man was doing. He caught up with him and asked, “What are you doing? There are hundreds of starfish. How many can you help? What difference does it make?” This man did not reply, took two more steps, picked up another one, threw it into the water, and said, “It makes a difference to this one.” What difference are we making? Big or small, it does not matter. If everyone made a small difference, we'd end up with a big difference, wouldn't we?

Ask

- What did you learn from this story?

Activity

What Motivates You?

- This is an individual activity.
- It is an exercise given in the Participant Handbook.

Do

- Ask the class to open their Participant Handbook and complete the exercise given in the section What Motivates You?
- Ensure that the participants have opened the correct page for the activity.
- Give the class 5 minutes to complete the activity.

Say

- Discuss the concept of attitude and how to cultivate a positive attitude as discussed in the Participant Handbook.

Summarize

- Close the discussion by summarizing how self-analysis, knowledge about what motivates you and your positive attitude can help in your business as well in life.

UNIT 12.1.4: Honesty & Work Ethics

Unit Objectives

At the end of this unit, participants will be able to:

- Discuss the qualities of honest people
- Describe the importance of honesty in entrepreneurs
- Discuss the elements of a strong work ethic
- Discuss how to foster a good work ethic

Resources to be Used

- Participant Handbook

Ask

- What do you understand by honesty?
- Why is it important for entrepreneurs to be honest?
- Do you remember any incident where your honesty helped you in gaining confidence?
- Do you remember any incident where someone lost business due to dishonesty?

Say

- Talk about honesty, qualities of an honest person, and the importance of honesty in entrepreneurs as discussed in the Participant Handbook.
- "Let's understand it better with the help of some case scenarios. You will be given some cases within your groups. You have to analyse the case scenario that has been given to you and then find an appropriate solution to the problem.
- Keep your discussion focussed around the following:
  - What went wrong?
  - Who was at fault?
  - Whom did it impact- the customer or the businessman?
  - How would it impact the business immediately? What would be the long term impact?
  - What could be done?
  - What did you learn from the exercise?

Do

- Divide the class into four groups of maximum six participants depending on the batch size.
- Give one case study to each group.
- Instruct them to read the case carefully.
- Put down the de-brief questions on the board and ask the groups to focus their discussion around these questions.
- The group is expected to analyse and discuss the case amongst them and find a solution to the given problem. Give the class5-10 minutes to discuss the case and note down their solutions.
- At the end of 10 minutes the team should present their case solution to the class. The presentation can be a narration or a role play.
- Ask the group to select a group leader for their group. The group leader to discuss and assign roles to the group members for the presentation.

Team Activity

Case Study Analysis

Scenario 1

Aakash has a small mobile retail sales and repair shop in Allahabad. He has one of the most popular outlets and has great rapport with his customers.

It's around 11 AM when a customer barges in to the shop and starts shouting at Aakash for giving her a faulty instrument. The screen of her mobile is cracked from one side. Aakash remembered thoroughly checking the handset before handing it over to the customer. The customer threatens to sue him and to go to Consumer Court for cheating her. Now, the problem occurred somewhere outside the shop but as other customers were listening to the conversation, it might impact his business. The situation needs to be managed very sensitively. What would you do if you were in Aakash's place?

Scenario 2

Rajni does beautiful Phulkari embroidery on suits and sarees. She has a small home-based business. She has a huge list of customers on Facebook and WhatsApp who give her orders regularly. Smita is one of her old and regular customers. As her sister-in-law's weddingwas around the corner, Smita wanted to buy few handcrafted Phulkari duppatta. She placed an order for three duppattas via WhatsApp and requested Rajni to send them as soon as possible. When the parcel reached Smita through courier she found that out of the three duppatas, only one was hand embroidered and the other two had machine embroidery on them. Even the length and the quality of the material was not as desired. Smita was heartbroken. It was a complete waste of money and moreover she couldn't wear what she had planned to during the wedding functions. She sent a message to Rajni on WhatsApp, expressing her anger and disappointment.

Smita has also sent a feedback and expressed her disappointment on the social media... this will directly affect Rajni's business. What would you do if you were in Rajni's place?

Scenario 3

Shankar is a tattoo artist who has a small tattoo showroom in a big, reputed mall in New Delhi. Mr Saksham had an appointment for today, at 11:00 am but he reached at 11:50 am. Meanwhile, Shankar had to reschedule his next appointment. After availing Shankar's services, Mr Saksham started yelling in an abusive language, refusing to pay the requisite amount, and finding faults in the services provided by him. Who was at fault in this case? What should Shankar do? Should he confront Saksham or give in to the demands of the client?

Scenario 4

Shailender is an online cloth reseller who does business through social networking sites such as Facebook and WhatsApp. Priyanka made online payment for a dress to Shailander. But she did not receive the dress for a month. When she asked for a cancellation, Shailander started misleading her. For almost 45 days, he kept promising her that he will pay the amount today, tomorrow, day after etc. Even after repeated calls and messages when she did not receive the payment or the dress, she decided to write a post against him on a popular social media platform. As a result, Shailender lost lots of customers and his flourishing business faced a major crisis. How could this situation have been managed?

Say

- Now, let's discuss the problem and solution with the larger group.
- The group will first briefly describe the case to the class.
- Then discuss the issue identified and the proposed solution.
- Once the presentation is over, the class can ask their questions.

Do

- Congratulate each group for the group presentation.
- Ask the audience to applaud for them.
- Ask de-brief questions to cull out the information from each group.
- Keep a check on time. Tell the group to wind up the discussion quickly if they go beyond the given time limit.

Summarize

- Ask the participants what they have learnt from the exercise/ activity.
- Ask if they have any questions related to what they have talked about so far.
- Close the discussion by summarizing the importance of honesty and work ethics for entrepreneurs.

UNIT 12.1.5: Creativity and Innovation

Unit Objectives

At the end of this unit, participants will be able to:

- List the characteristics of highly creative people
- List the characteristics of highly innovative people

Resources to be Used

- Participant Handbook
- Chart papers
- Marker pens

Ask

- You must be aware of the term 'Rags to riches' and heard stories related to the term.
- What do these stories tell us?
- What was so special about these people?

Say

- Let's have a look at these stories.
- There are some inspiring stories about people which I would like to share with you.
- Narrate these stories to the class.

A.P.J. Abdul Kalam

Who has not heard of A.P.J. Abdul Kalam: Avul Pakir Jainulabdeen Abdul Kalam hailed from a very humble background. His father was a boat owner. To help his family, Kalam would work as a newspaper vendor. With limited resources, he graduated in Physics and studied aerospace engineering. He was instrumental in India's step towards nuclear energy. In 2002, he became the 11th President of India.

Water filter/purifier at source

Two young boys studying in classes 4 and 5, from Lingzya Junior High School, Sikkim designed a simple innovative low cost water purifier.

Inspiration behind the idea: Most people today prefer to use a water filter/purifier at their home.

Both the children have given idea to have filter/purifier at the source of water so that everyone has access to clean water without having to make an investment in purchasing a filter/purifier.

Soring's idea is to have a centralised purification system at the point of distribution like water tank while Subash's idea is to have such purifiers attached to public taps.

Source: http://www.rediff.com/getahead/report/achievers-top-31-amazing-innovations-from-young-indians/20151208.htm

Solar seeder

This is a story of a innovative solar seeder and developed by Subash Chandra Bose, a class 8, student from St Sebasthiyar Matriculation School, Pudukkottai, Tamil Nadu. Subash has developed a solar powered seed drill, which can undertake plantation for different size of seeds at variable depth and space between two seeds.

Source: http://www.rediff.com/getahead/report/achievers-top-31-amazing-innovations-from-young-indians/20151208.htm

Looms for physically challenged

Now this is really inspiring of two sisters, Elakkiya a Class 6 student and Pavithra a Class 9 student of SRC Memorial Matriculation, Erode, Tamil Nadu.

The two sisters have come up with loom for lower limbed physically challenged. In their loom they have replaced the pedal operated system with a motor and a gearbox attached to a pulley mechanism.

Source: http://www.rediff.com/getahead/report/achievers-top-31-amazing-innovations-from-young-indians/20151208.htm

Ask

- If they can, why can't you?
- Discuss concepts related to 'Creativity and Innovation' with the participants as given in the Participant Handbook.

Say

- Recall the stories on motivation.
- What is the inner drive that motivates people to succeed?
- Let's learn more about such creative and innovative entrepreneurs with the help of an activity.

Team Activity

- This is a group activity.

- Think of any one famous entrepreneur and write a few lines about him or her.

Activity De-brief

- Why did you choose this particular entrepreneur?
- What is his/her brand name?
- What creativity does he/she possess?
- What was innovative about their ideas?

Do

- Instruct the participants that this is group work.
- Divide the class into small groups of 4 or 6 depending on the batch size.
- Give each group a chart paper.
- Tell the participants they have to write a few lines about any one famous entrepreneur.
- Give the participants 10 minutes to discuss and write.
- Keep a check on time. Tell the group to wind up quickly if they go beyond the given time limit.
- Ask each group to read out what they have written.
- Ask the de-brief questions.

Summarize

- Summarize the unit by asking participants if they know of some people who are highly creative and innovative in their approach.
- Ask them to share some experiences about these people with the class.

Notes for Facilitation

- Source for stories on innovations:

http://www.rediff.com/getahead/report/achievers-top-31-amazing-innovations-from-young-indians/20151208.htm

UNIT 12.1.6: Time Management

Unit Objectives

At the end of this unit, participants will be able to:

- Discuss the benefits of time management
- List the traits of effective time managers
- Describe effective time management techniques

Resources to be Used

- Participant Handbook

Ask

Does this sound like you?

- I can never get enough time to finish what I am doing in a day.
- I have so many things to do that I get confused.
- I want to go for a walk and exercise, but I just do not have the time.
- I had so much to do, so I could not deliver that order on time.
- I would love to start my dream business; but, I just do not have the time.

Example

- Let's look at these two examples:

Example 1:

Ankita works from home as a freelance writer. She says she can easily put in 8 hours of dedicated work in a day. Because she works from home, she saves money on travel and has a comfortable work routine. But there is a challenge and it is distraction. As she works from home, she can easily just get up and sit down on the sofa to watch TV, wasting valuable time. She may have chores to do, errands to run and bills to pay. She ends up working only two to three hours a day and the result is, her work gets piled up. She is unable to take on more work due to this. Even though her quality of work is appreciated her clients are not very happy about the delay in submission.

Example 2:

Javed has started a successful online selling company from home and makes a good living from his sales. He has set up a small office space in his living room. As both his parents are working full-time, he also has the role of taking care of his two younger siblings. He almost spends half of his day with the younger kids. He does not mind it but it means taking time away from the work. He is still able to manage his online business with these commitments. He wants to spend some more dedicated hours so as to increase his profits. He also wants to look into new business avenues. What should he be doing.

Ask

- Does this happen with you too?
- Do you find it difficult to prioritize your work?
- Are you able to manage your time effectively?

Activity

- Conduct a group discussion based on the above examples.
- Direct the discussion on how to prioritize work and manage time effectively.

Say

- Time management is not only about how hard you work but also about how smart you work.
- Discuss "What is Time Management" with the participants as given in the Participant Handbook.

Ask

- Why is it important to manage time? How does it help?
- What happens when you don't manage your time effectively?
- Do you find it difficult to prioritize your work?

Say

- Discuss the benefits of time management given in the Participant Handbook.
- Let's learn effective time management with the help of an activity.

Activity

Effective Time Management

- This activity has two parts:

PART 1

TO-DO LIST

- You have to make a to-do list.
- List all of the activities/ tasks that you have to do.
- Try to include everything that takes up your time, however unimportant it may be.
- If they are large tasks, break them into action steps, and write this down with the larger task.
- You can make one list for all your tasks or have separate to-do lists for personal and professional tasks.

PART 2

URGENT-IMPORTANT GRID

- You have to make a grid as shown on the board here. .
- This grid has four boxes. As you can see, each box has a different heading.
- At the heart of the urgent-important grid, are these two questions:
  - Is this task important?
  - Is this task urgent?
- Now, you have to think about each activity that you have written in your to-do list and put it into one of the four categories.
- **What do these categories depict?**
- **Category 1: Urgent/Important**
  - This category is for the highest priority tasks. They need to get done now.

- **Category 2: Not Urgent/Important**
  - This is where you want to spend most of your time.
  - This category allows you to work on something important and have the time to do it properly.
  - This will help you produce high quality work in an efficient manner.
  - The tasks in this category are probably the most neglected ones, but also the most crucial ones for success.
  - The tasks in this category can include strategic thinking, deciding on goals or general direction and planning – all vital parts of running a successful business.
- **Category 3: Urgent/Not Important**
  - This is where you are busy but not productive. These tasks are often mistaken to be important, when they're most often busywork.
  - Urgent but not important tasks are things that prevent you from achieving your goals.
  - However, some may be activities that other people want you to do.
- **Category 4: Not Important and Not Urgent**
  - This category doesn't really include tasks, but rather habits that provide comfort, and a refuge from being disciplined and rigorous with your time management.
  - Some may be activities that other people want you to do.
  - These might include unplanned leisure activities as well.

TO- DO list format

1.	
2.	
3.	
4.	
5.	
6.	
7.	
8.	
9.	
10.	
11.	
12.	
13.	
14.	
15.	

URGENT-IMPORTANT GRID

URGENT/ IMPORTANT • Meetings • Last minute demands • Project deadlines • Crisis	**NOT URGENT/ IMPORTANT** • Planning • Working towards goals • Building relationship • Personal commitments
• Interruptions • Phone calls/ E-mails • Other people's minor demands **URGENT/ NOT IMPORTANT**	• Internet surfing • Social media • Watching TV **NOT URGENT/ NOT IMPORTANT**

1	2
3	4

URGENT/ IMPORTANT GRID format

URGENT/ IMPORTANT	**NOT URGENT/ IMPORTANT**
URGENT/ NOT IMPORTANT	**NOT URGENT/ NOT IMPORTANT**

1	2
3	4

Do

- Put down the formats for the to-do list and the urgent/ important grid on the board.
- Instruct the participants to prepare their to-do list first.
- Give the participants 10 minutes to prepare the list.
- Once done, instruct them to divide the tasks in to-do list into the four categories.
- Explain the four categories to the participants giving examples specific to their context.
- As you explain the categories fill the grid with the type of tasks.
- Give the participants 40 minutes to fill the grid.
- Then explain how to balance the tasks between the four categories.
- Keep a check on time. Tell the group to wind up quickly if they go beyond the given time limit.

Say

Activity De-brief:

How can we balance tasks between the four categories?

How to manage time through this grid?

- **Category 1: Urgent/Important**
  - Try to keep as few tasks as possible here, with the aim to eliminate.
  - If you spend too much of your time in this category, you are working solely as a trouble shooter, and never finding time to work on longer-term plans.
- **Category 2: Not Urgent/Important**
  - Plan these tasks carefully and efficiently as they are most crucial ones for success.
  - If necessary, also plan where you will do these tasks, so that you're free from interruptions.
  - Include strategic thinking, deciding on goals or general direction and planning in your planning process.
- **Category 3: Urgent/Not Important**
  - Ask yourself whether you can reschedule or delegate them.
  - A common source of such activities is other people. Sometimes it's appropriate to say "no" to people politely, or to encourage them to solve the problem themselves.
- **Category 4: Not Important and Not Urgent**
  - You also want to minimize the tasks that you have in this category.
  - These activities are just a distraction – avoid them if possible.
  - You can simply ignore or cancel many of them.
  - Politely say "no" to work assigned by others, if you can, and explain why you cannot do it.
  - Schedule your leisure activities carefully so that they don't have an impact on other important tasks.
- Discuss the traits of effective time managers and effective time management techniques as given in the Participant Handbook.

Summarize

- Discuss the traits of effective time managers and effective time management techniques as given in the Participant Handbook.

Notes for Facilitation

- Here is a short story. You can conclude the session narrating the story. To make it more interesting you can perform the demonstration described and discuss the short story.
  - One day an expert in time management was speaking to a group of students. As he stood in front of the group, he pulled out a large wide-mouthed glass jar and set it on the table in front of him. Then he took out a bag of about a dozen rocks and placed them, one at a time, into the jar. When the jar was filled to the top and no more rocks would fit inside, he asked, "Is this jar full?" Everyone in the class said, "Yes." Then he said, "Really?"
  - He reached under the table and pulled out a bucket of gravel (small stones). He dumped some gravel in and shook the jar causing pieces of gravel to work themselves down into the space between the rocks. Then he asked the group once more, "Is the jar full?" By this time, the class began to understand. "Probably not," one of them answered. "Good!" he replied.
  - He reached under the table and brought out a bucket of sand. He started dumping the sand in the jar and it went into all of the spaces left between the rocks and the gravel. Once more he asked the question, "Is this jar full?" No!" the class shouted. Once again he said, "Good." Then he grabbed a jug of water and began to pour it in until the jar was filled to the brim. Then he looked at the class and asked, "What is the point of this illustration? “One student raised his hand and said, “No matter how full your schedule is, if you try really hard you can always fit some more things in it!" "No," the speaker replied, "that's not the point. The truth this illustration teaches us is: If you don't put the big rocks in first, you'll never get them in at all." What are the 'big rocks' in your life? Your children; your loved ones; your education; your dreams; a worthy cause; teaching or mentoring others; doing things that you love; time for yourself; your health; your mate (or significant other). Remember to put these BIG ROCKS in first or you'll never get them in at all. If you sweat about the little stuff (the gravel, sand, and water) then you'll fill your life with little things you worry about that don't really matter, and you'll never have the time you need to spend on the big, important stuff (the big rocks).
- End the story with these lines…

  So, tonight, or in the morning tomorrow, when you are reflecting on this short story, ask yourself this question: What are the 'big rocks' in my life? Then, put those in your jar first

UNIT 12.1.7: Anger Management

Unit Objectives

At the end of this unit, participants will be able to:

- Discuss the importance of anger management
- Describe anger management strategies
- Discuss tips for anger management

Resources to be Used

- Participant Handbook

Ask

- What is anger? Is anger good or bad?
- Is anger normal or an abnormal behaviour? How can anger harm you?
- Why is it important for entrepreneurs to manage their anger?

Say

- Talk about anger and the importance of anger management in entrepreneurs as discussed in the Participant Handbook.
- Let us do a small activity. This is an individual activity.
- Think of the incidents and situations that angered you and hurt you.

Do

- Instruct them to note down these situations under different categories (as given in the Activity).
- Give the class 3-5 minutes to think and note down their answers.
- At the end of 5 minutes, ask some participants to volunteer and present their answers.
- They can also share these situations with their fellow participants if they do not wish to share it with the entire class.

Activity

- Do you remember any incident which has hurt
  - you physically
  - you mentally
  - your career
  - your relationships.

Ask

- Do you ever get angry?
- What are the things that make you angry?
- Do you remember any incident where your anger management helped you in maintaining healthy relationship?
- Do you remember any incident where someone lost business/ friend/ relationship due to temper (anger)?

Say

- There are a few strategies which can help in controlling your anger. Let's do an activity to understand the anger management process better.
- This is an individual activity.
- Think of the incidents/ situations which trigger your anger (the cause).
- Then think what happened as a result of your anger (the effect).
- You need to come up with some techniques to manage your anger.

Do

- Give the class the anger triggers (the cause) as listed in the activity.
- Put down the activity format (Anger Triggers, Result of your Anger, Anger Management Techniques) on the board and instruct the class to write the answers under different categories.
- Give the class 3-5 minutes to think and note down their answers.
- At the end of 5 minutes, ask the participants who wish to volunteer and present their answers.

Activity

Trigger points and Anger Management Techniques Activity

Anger Triggers

List of triggers that make you angry:
Someone says you did something wrong.
You want something you can't have now.
You get caught doing something you shouldn't have been doing.
You are accused of doing something you didn't do.
You are told that you can't do something.
Someone doesn't agree with you.
Someone doesn't do what you tell him to do.
Someone unexpected happens that messes up your schedule.

Result of your anger:

Write the techniques that you use to manage your anger:
Anger Management Techniques

Say

- Now, let's discuss the problems and solution with all.
- The individual will first briefly describe trigger points to the class.
- Then discuss the result of the anger. Other participants are requested to remain quiet while one is making the presentation.
- Post presentation, other participants may ask questions.

Do

- Congratulate each individual for sharing their points.
- Ask the audience to applaud for them.
- Ask de-brief questions after the presentation to the class.
- Keep a check on the time. Ask the participants to wind up the activity quickly if they go beyond the given time limit.

Ask

De-brief questions:

- In the situation described by the presenter, who was at fault?
- How could you have handled this situation alternatively?

Summarize

- Close the discussion by summarizing the strategies and tips of anger management for entrepreneurs.
- Ask the participants what have they learnt from this exercise/ activity.
- Ask if they have any questions related to what they have talked about so far.

Notes for Facilitation

- Encourage the participants to share information about them while presenting the situations to the class.
- Keep the format of the Activity prepared in a chart paper so that it can be displayed during the session.

UNIT 12.1.8: Stress Management: What is stress?

Unit Objectives

At the end of this unit, participants will be able to:

- Discuss the causes of stress
- Discuss the symptoms of stress
- Discuss tips for stress management

Resources to be Used

- Participant Handbook

Ask

- You are waiting in the reception for an interview or a very important meeting, suddenly your legs are shaky, your hands are cold, you are feeling nervous. Have you ever been in this kind of situation?
- Have you had days when you had trouble sleeping?
- Have you ever been so worried about something that you ended up with a terrible headache?

Say

- You've probably heard people say, I'm really stressed out" or "This is making me totally stressed."

Ask

- What do you understand by stress?
- What gives you stress?
- How do you feel when you are stressed or what are the symptoms of stress?
- How can stress harm you?
- Why is it important for entrepreneurs to manage stress?

Say

- When we feel overloaded or unsure of our ability to deal with certain challenges, we feel stressed.
- Discuss about stress, causes of stress, and symptoms of stress as discussed in the Participant Handbook.
- Let's understand the causes of stress and how to deal with them with the help of some case scenarios.
- You will be given some cases.
- You have to analyse the case scenario and then find an appropriate solution to the problem.
- This will be a group activity.

Do

- Divide the class into four groups of 5- 6 participants (depending on the batch size).
- Assign one case scenario to each group.
- Instruct them to read the case carefully.
- The group is expected to analyse and discuss the case amongst them and find a solution to the given problem.
- Explain their discussion should result in getting answers for the following questions:

- What was/ were the cause(s) of stress?
- Was the stress avoidable or manageable under the given circumstances?
- If yes, how do you think that the stress could be avoided (managed)?
- If no, then why not?

- Give the class 10-12 minutes to discuss the case and note down their solutions.
- At the end of 12 minutes, the team should present their case solution to the larger group.
- Ask the group to select a group leader for their group.
- The group leader to discuss and assign roles to the group members for the presentation.

Team Activity

Case Study Analysis

Scenario 1

Akash's alarm doesn't go off and he gets late getting out of the house. He hits traffic and ends up 15 minutes late to work, which his boss notices. He gets to his desk and finds he has to complete 2 reports in next one hour. Just when he is about to begin work, a message pops up "Telecon with the client begins in 10 minutes. Please be in the conference room in 5 minutes."

His is not prepared for the call. He is stressed. He does not want to speak to his boss about this. He is stressed, feeling uncomfortable and sick. Not in a position to attend the call or finish the reports on time.

Scenario 2

While paying his overdue bills, Rahul realised that it's the middle of the month and he has only Rs 500 left in his account. He has already asked all of his friends, and family for loans, which he hasn't paid back yet. He is still contemplating over the issue when his phone rings. His sister's birthday is due next week and she has seen a beautiful dress which she wants to buy but cannot tell the parents as it is a bit expensive. She wishes if Rahul could buy the dress for her. Rahul has promised to buy her the dress for her birthday.

Rahul is stressed, does not understand what to do. He is unable to concentrate on his work and unable to complete the tasks assigned. His team leader has already warned him of the delay.

Scenario 3

Sheela calls the cable company as she has unknown charges on her bill. She has to go through the automated voice mail menu three times and still can't get through to a customer care executive. After 15 minutes of repeated efforts, her call is answered. She explains the entire issue to the customer care executive but before the person could suggest a way out, the call drops.

Now Sheela has to call back and repeat the whole process all over again with a new customer care executive. She is very angry and calls again but cannot connect this time.

She has to leave to office so she decides to call from office and check. When she connects this time she is angry and argues with the executive on the call. All her co-workers around are looking at her as her volume has suddenly increased. She bangs the phone and ends the call.

Her co-worker Neelam enquires what has happened to her. She ignores her and just walks off. She has become irritable and her behaviour and tone with other co-workers is not acceptable.

Scenario 4

Arpit is a young entrepreneur who started doing business through Facebook few weeks back. He had always been into a job. Although Arpit has very few financial liabilities, it wasn't an easy decision to leave a comfortable job at once and look for newer pastures. Arpit's boss warned him of the consequences and the challenges of starting a business when nobody ever in his family had been in business.

He has not been able to get a good deal till now. This is an important life shift for him which comes with unknown variables. Arpit is nervous and is wondering if he has what it takes to fulfill the requirement of his new role, or the new experiences he's likely to face.

Ask

De-brief questions:

- What was/ were the cause(s) of stress?
- Was the stress avoidable or manageable under the given circumstances?
- If yes, how do you think that the stress could be avoided (managed)?
- If no, then why not?

Say

- Now, let's discuss the problem and solution with the larger group.
- The group will first briefly describe the case to the class.
- Then discuss the issue identified and the proposed solution.
- Post presentation, the other groups may ask questions to the group that has presented.

Do

- Congratulate each group for sharing their points.
- Ask the audience to applaud for them.
- Ask de-brief questions to cull out the information from each group.
- Keep a check on time. Tell participants to wind up the discussion quickly if they go beyond the given time limit.

Say

- While it is common and normal to feel some tension. This feeling nervous and tensed can interfere with your thinking process and can have a negative impact on your performance.
- Stress can deplete the most vibrant of souls. It can have a negative effect on every aspect of a person's life including their health, emotional well-being, relationships, and career. However, one needs to understand the causes and types of stress before looking for ways to manage it.

De-brief:

Scenario 1

The cause of stress was lack of time management and the habit of procrastinating. If Akash would have managed his time well, planned alternate ways to get up on time, finished prior tasks on time and planned for client meetings in advance then he wouldn't have faced stress.

Scenario 2

The cause of stress was lack of financial planning. Rahul should have planned his financial resources well in advance and saved some money for the rainy day. Also, differentiating between needs and wants and keeping a check on non-essential expenditure would have saved Rahul from this situation.

Scenario 3

Sometimes, stress is caused due to external factors instead of internal ones. In this case, the stress was unavoidable because we have no control over this customer care system. Every time, you will get in touch with a new executive and will have to explain all over again. This might cause stress but despite being frustrated and angry there is little that we can do about it. All Sheela could do was to find ways to calm herself down through some breathing exercises and meditation, reading some good book or listening to music and then start afresh.

Scenario 4

A positive, major life change can be a source of good stress. Regardless of how good the change is, it can be stressful. Stress caused by a positive and major life change can be beneficial because it causes a person to step out of their comfort zone and learn new skills. Here, Arpit may become a successful entrepreneur or learn new ways to do things differently.

Now let us see this scenario, can I have a volunteer to read out this case to the class.

Do

- Ask one of the participant who can volunteer and read out this scenario to the class.

Scenario 5

Rakesh lives in Kathmandu with his wife and two beautiful daughters Sarah and Sanya. Nepal was hit by a massive earthquake and Rakesh's building collapsed during the earthquake. During evacuation, Rakesh realised that though his wife and Sarah were fine and suffered only minor bruises, Sanya was nowhere in the scene. Panic stricken, he started calling her name and searching her frantically. A little later, he heard a meek voice from beneath the debris. He quickly removed the rubble to find a huge bed. Rakesh was pretty sure that Sanya was trapped underneath. Though he was badly bruised, he gathered all his courage and with all his might, he lifted the several-ton bed to save Sanya's life. Everyone was relieved to see Sanya alive and also extremely surprised to see this father's ability to access superhuman strength.

- Ask the audience to applaud for the participant after the scenario is read completely.
- Discuss the scenario, ask de-brief questions:
  - What kind of stress was Rakesh undergoing in this case?
  - Was the stress avoidable or manageable under the given circumstances?
  - What was the result of the stress?

Say

De-brief:

- Not all stress is harmful; good stress is actually energizing. This was a case of lifesaving stress, or hero stress, which is an important example of good stress. You may have heard stories in which a person performs an impossible feat of physical strength in order to save their life or the life of someone they love. This type of stress causing a surge of adrenaline is good for us.

Summarize

- Close the discussion by summarizing the tips to manage stress as given in the Participant Handbook.
- Ask the participants what they have learnt from this exercise/ activity.
- Ask if they have any questions related to what they have talked about so far.

Notes for Facilitation

- Keep printed copies of the activities/ scenarios ready for the session.
- Put down the de-brief questions on a flip chart so that it can be displayed in the class during the activity.
- Encourage participation and make the discussions interative.

Notes

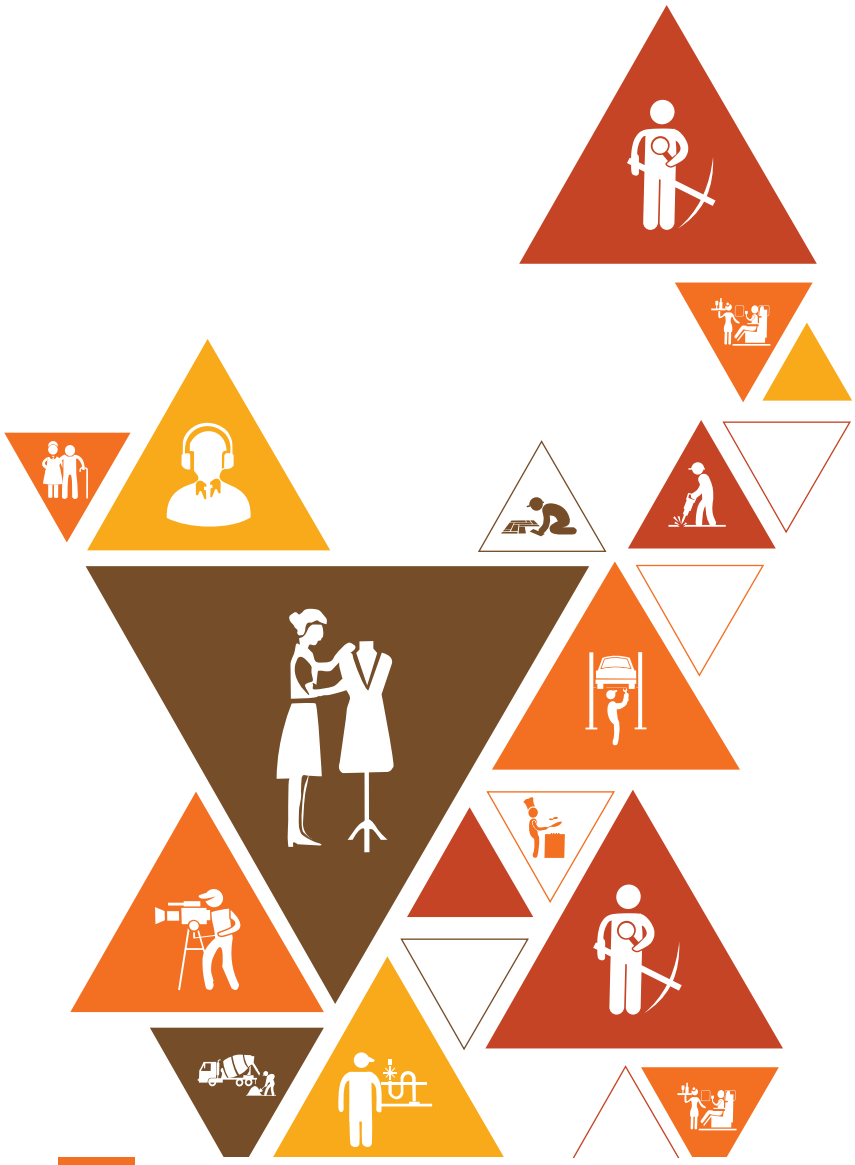

UNIT 12.2: Digital Literacy: A Recap

Key Learning Outcomes

At the end of this unit, participants will be able to:

1. Identify the basic parts of a computer
2. Identify the basic parts of a keyboard
3. Recall basic computer terminology
4. Recall the functions of basic computer keys
5. Discuss the main applications of MS Office
6. Discuss the benefits of Microsoft Outlook
7. Identify different types of e-commerce
8. List the benefits of e-commerce for retailers and customers
9. Discuss Digital India campaign will help boost e-commerce in India
10. Describe how you will sell a product or service on an e-commerce platform

UNIT 12.2.1: Computer and Internet Basics: Basic Parts of a Computer

Unit Objectives

At the end of this unit, participants will be able to:

- Identify the basic parts of a computer
- Identify the basic parts of a keyboard
- Recall basic computer terminology
- Recall the functions of basic computer keys

Resources to be Used

- Participant Handbook
- Computer Systems with the required applications

Say

- Let's take a quick recap of the basic computer parts.
- Discuss 'Basic Parts of Computer' and 'Basic Parts of a Keyboard' with the class as given in the Participant Handbook.

Explain

- Explain all the parts of the computer and the keyboard by demonstrating on the real system.

Ask

- Do you know about internet?
- Have you ever used internet?
- Why do you think internet is useful?
- What was the last task you performed on internet?

Say

- Let's look at some basic internet terms.
- Discuss 'Basic Internet Terms' with the participants as given in the Participant Handbook.

Summarize

- Ask the participants what they have learnt from this exercise/ activity.
- Ask if they have any questions related to what they have talked about so far.
- Close the discussion by summarizing the importance of computer and internet for entrepreneurs.

Practical

- Conduct a practical session.
- Ask the participants to assemble in the computer lab.
- Give some hands on practice exercises.

Do

- Group the participants for the activity depending on the batch size and the number of computer systems available in the lab.
- Explain the purpose and duration of the activity.
- Ensure the participants complete the practical exercises assigned.

UNIT 12.2.2: MS Office and Email: About MS Office

Unit Objectives

At the end of this unit, participants will be able to:

- Discuss the main applications of MS Office
- Discuss the benefits of Microsoft Outlook

Resources to be Used

- Participant Handbook
- Computer Systems with MS Office

Ask

- What is the most frequent activity that you do on the computer?
- Do you know how to make presentations on the computer?

Say

- Give a brief introduction of MS Office as given in the Participant Handbook.
- Discuss the most popular office products. Explain in brief their application, benefits and working.
- **Microsoft Word** is a word processing program that allows for the creation of documents. The program is equipped with templates for quick formatting. There are also features that allow you to add graphics, tables, etc.
- **Microsoft Excel** is a tool for accounting and managing large sets of data. It can also simplify analysing data. It is also used to create charts based from data, and perform complex calculations. A Cell is an individual data box which will have a corresponding Column and Row heading. This gives the cell a name, referred to as the Cell Reference. There can be multiple pages in each workbook. Each page, or sheet, is called a Worksheet. When you open a new Excel file, it automatically starts you with three worksheets, but you can add more.

Explain

- Explain the working and frequently used features of Office on a real system.

Ask

- What do you know about e-mails?
- Do you have an email id?
- How often do you check your e-mails?

Say

- Communication is vital for every business. The fastest and the safest way to communicate these days are through emails. MS Outlook helps to manage your emails in a better way and also offers a host of other benefits.
- Discuss "Why Choose Microsoft Outlook?" with the participants as given in the Participant Handbook.

Do

- Ask the participants to assemble in the computer lab.
- Explain the working of Outlook on a real system..

Demonstrate

- Demonstrate how to create email id.
- Demonstrate how to write new mails, send mails.
- Demonstrate how to use MS Office application to create a letter and send it as attachment in an email.
- Demonstrate how to use other MS Office applications.

Practical

- Give some hands on practice exercises
- Group the participants for the activity depending on the batch size and the number of computer systems available in the lab.
- Explain the purpose and duration of the activity.

Summarize

- Ask the participants what they have learnt from this exercise/ activity.
- Ask if they have any questions related to what they have talked about so far.

UNIT 12.2.3: E-Commerce

Unit Objectives

At the end of this unit, participants will be able to:

- Identify different types of e-commerce
- List the benefits of e-commerce for retailers and customers
- Discuss Digital India campaign will help boost e-commerce in India
- Describe how you will sell a product or service on an e-commerce platform

Resources to be Used

- Computer System with internet connection
- Participant Handbook

Ask

- How many of you have done shopping online?
- Can you name at least five shopping websites?
- What is the product that you most frequently buy online?
- Why do you do shopping online instead of going to the market?

Say

- Give a brief introduction of "What is E-commerce". Refer to the Participant Handbook.
- E- commerce emerged in the early 1990s, and its use has increased at a rapid rate. Today, many companies sell their products online. Everything from food, clothes, entertainment, furnitureand many other items can be purchased online.

Ask

- What other types of transactions have you performed on the internet other than buying products?

Say

- Give examples of e-commerce activities from Participant Handbook.

Team Activity

E-commerce examples

- Instruct the participants to list some of the payment gateways that they have used for e-commerce activities.
- Give them 5 minutes to make this list.
- Discuss payment gateways and transaction through payment gateways.
- Conclude the discussion by mentioning how important e-commerce has become in our day to day transactions.

Say

- E-commerce activities can be classified based on the types of participants in the transaction.
- Discuss "Types of E-commerce" from the Participant Handbook.

Do

- Discuss all types of E-commerce by giving examples and names of some popular websites which use them.
- Make the discussion interactive by asking the class to share some popular e-commerce sites of each type.

Say

- E-commerce activities bring a host of benefits for both, retailers and customers.
- Discuss benefits of E-commerce from the Participant Handbook.

Explain

- The majority of the population that uses E-commerce activities lives in tier-1 and tier-2 cities. To encourage the use of digital money in tier-3 and 4 areas, PM Mr. Modi launched the "Digital India Campaign".
- Discuss "Digital India Campaign" from the Participant Handbook.
- By Digital India project the government will deliver services via mobile connectivity and in doing so, is expected to bring the internet and broadband to remote corners of the country. This connectivity will in turn enhance e-commerce activities also. Furthermore, the Indian Government is also modernizing India Post and aims to develop it as a distribution channel for e-commerce related services.

Say

- Now let us discuss how to sell a product using E-commerce.
- Every product has to be sold on a platform on the internet. Think of it as a shop that you have to sell your product. Now this shop can be your own or shared or rented. If the shop is your own or rented there will be only your products in that shop. If the shop is shared, there will be products of multiple sellers in that shop. A common example is a departmental store which has products from multiple brands in the shop.
- Similarly, in E-commerce the shop is the website where your products are displayed. If it is your own website it will exclusively showcase your products. In this case the cost that you will incur will be:
    - Developing the website
    - Hosting the website
    - Maintenance of the website
- If you rent a website it will also showcase your own products but the development, hosting and maintenance parts goes to the owner. This saves time and the cost to manage these activities.
- Smaller companies usually go for renting a website and the bigger ones develop their own website.
- The concept of shared platforms has become very popular in recent times. In this platform the sellers have to register and then they can sell their goods on a common platform. Among the most popular of these are Amazon, Myntra, Flipkart, etc.

Role Play

- Tell the participants to choose a product or service that they want to sell online.
- Tell them to write a brief note explaining how they will use existing e-commerce platforms, or create a new e-commerce platform to sell their product or service.

Ask

- How much money are you carrying in your wallet?
- Do you have a credit/debit card?
- How do you make payments while doing online shopping?

Say

- Demonetization has made carrying cash in the wallet very difficult. People either shop through cards or some other form of digital money.
- So what do you think is digital money?
- In this form the money is both paid and received digitally. There is no hard cash involved. It is an instant and convenient way to make payments.
- There are various types of digital payments. Let us discuss some of them in brief here.
- The first one is the most commonly used system i.e. the cards. Debit card, credit card, prepaid card, all fall under this category.
- Then is the e-wallet or the mobile wallet. This has become the most used form of digital money after demonetization. Examples are Paytm, state bank buddy, Freecharge, etc.
- Many other forms of digital money are also coming up in market like mobile apps, Aadhar card based payment, etc.

Do

- Demonstrate how to make and receive payments through digital models like Paytm and state bank buddy.

Ask

- Why do you think people have started using digital money instead of hard cash? Is demonetization the only reason?

Say

- Digital money gives a lot of advantages over the conventional hard cash. Some of them are:
  - Digital payments are easy and convenient. You do not need to take loads of cash with you, a mobile phone or a card will suffice.
  - With digital payment modes, you can pay from anywhere anytime.
  - Digital payments have less risk.

Summarize

- Ask the participants what they have learnt from this exercise/ activity.
- Ask if they have any questions related to what they have talked about so far.
- Close the discussion by summarizing the importance of e-commerce and digital money.

Notes

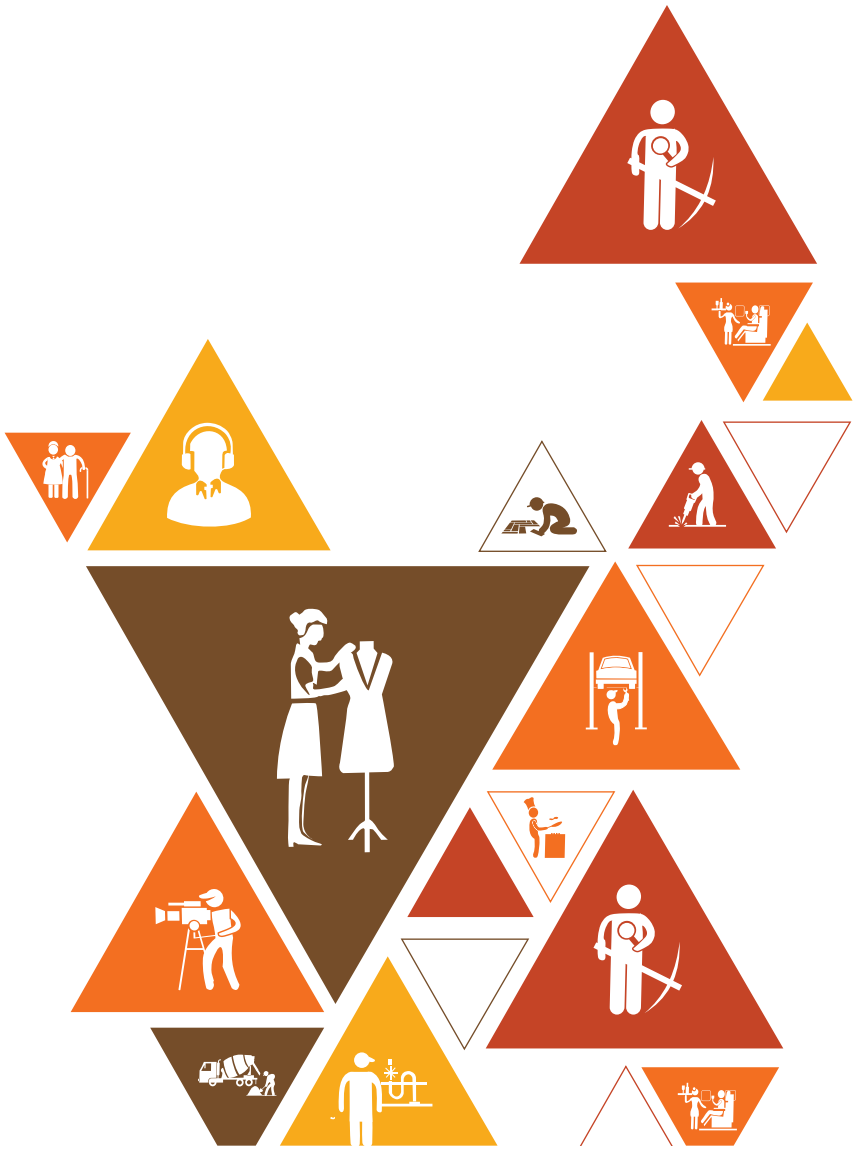

UNIT 12.3: Money Matters

Key Learning Outcomes

At the end of this unit, participants will be able to:

1. Discuss the importance of saving money
2. Discuss the benefits of saving money
3. Discuss the main types of bank accounts
4. Describe the process of opening a bank account
5. Differentiate between fixed and variable costs
6. Describe the main types of investment options
7. Describe the different types of insurance products
8. Describe the different types of taxes
9. Discuss the uses of online banking
10. Discuss the main types of electronic funds transfer

UNIT 12.3.1: Personal Finance – Why to Save?

Unit Objectives

At the end of this unit, participants will be able to:

- Discuss the importance of saving money
- Discuss the benefits of saving money

Resources to be Used

- Participant Handbook

Ask

- How many of you save money?
- Why do you feel the need to save it?
- Do you plan your savings?
- Where do you keep the money you save?
- How do you use the money that you have saved?

Example

- Let's look at these two examples:

Example 1:

Suhani works in a good company and earns Rs.30, 000 month. She always saves 5000 per month and keeps it aside as a personal saving. She keeps the money at home and has saved quite a lot. One day her mother has a medical emergency and has to be taken to the hospital. Her family is worried about the amount they have to spend for the treatment. It will cost them atleast 40,000.

Suhani says tells her family not to worry and that she has about 50,000, which she has saved over the months.

Example 2:

Jasmeet works in the same company and earns the same as Suhani. She is very fond of shopping and spends most of her money on buying new clothes. At the end of the month, she is always asking her father for money as her pay is finished.

Ask

- Who do you identify with –Suhani or Jasmeet ?
- How do you think Suhani manages to save money which Jasmeet is unable to do?

Say

- We should always set aside some and save some money from our monthly pay. The future is unpredictable. Saving money not only gives you a sense of financial security but it can be used in case of emergencies.
- Discuss “Importance of Saving” with the participants as given in the Participant Handbook.

Ask

- What are the benefits of saving money?
- What does being financially independent mean to you?

Say

- Discuss "Benefits of Saving" with the participants as given in the Participant Handbook.
- Now let us continue with Suhani's story. Suhani has told her family not to worry and that she has about 50,000, which she has saved over the months. The family is happy about Suhani's decision of saving money, which will be of great help for them now.

  Suhani is going to the hospital today to pay the first instalment for the treatment. Suddenly finds only 35,000 in her cash box when she counts and does not remember using it. She has not kept any record and now she is upset.

Ask

- Was it a good decision by Suhani to save a part of her earnings every month?
- Was it a wise decision to keep all her savings as cash in a cash box?
- Could she have managed to save money in a better and more effective manner?
- Do you want to learn how to save money and use it effectively?

Say

- Let's learn personal saving with the help of a group activity.

Team Activity

Personal Finance- Why to save

- This activity has two parts:

PART 1

WAYS TO SAVE MONEY

- You are earning 30,000/- per month. You have recently changed your job and have to move to a metropolitan city. You are now living as a paying guest paying 10,000/- per month. Your other estimated expenditures like travel, food, recreation would be around Rs. 17, 000 per month.
- Make a list of different ways to save money.

PART 2

HOW WILL YOU USE THE MONEY

- After a year how much have you been able to save?
- How will you use the money that you have saved?

Do

- Divide the class into groups of four.
- Instruct the participants to think and prepare a list of the various ways they can save money.
- Give the participants 10 minutes to prepare the list.
- Once done, instruct them to think of how they could use the money they have saved.
- Give the participants 10 minutes to prepare the list.
- Keep a check on time. Tell the group to wind up quickly if they go beyond the given time limit.

Activity De-brief

- What were the different ways you could save money?
- How much money were you able to save?
- How will you use the money you have saved in one year?

Say

- Discuss the importance of personal finance and why it is important to save money.

Summarize

You can summarize the session by discussing:

- The importance of saving money.
- Ways to save money.
- How the money saved can be used for different purposes.

UNIT 12.3.2: Types of Bank Accounts, Opening a Bank Account

Unit Objectives

At the end of this unit, participants will be able to:

- Discuss the main types of bank accounts
- Describe the process of opening a bank account

Resources to be Used

- Account opening sample forms
- Participant Handbook

Ask

- How many of you save money?
- Where do you keep the money you save?
- How many of you have a bank account?
- What type of account do you have?

Example

- Let's look at the given example:

Reena is in the third year of college but in the evening she gives tuitions for children living in her colony. She earns 15,000/- per month. As her students stay in different parts of the city, she has to walk a lot.

To save time, she decides to buy a second hand scooter for herself. But she has to save money for it. Her class mate advises her to open a recurring deposit account in the bank.

She goes to the bank close to her home. The personal manager gives her some forms to fill. She is confused as she has never done this before. Her elder sister has an account in the same bank. She asks for help from her sister. She goes to the bank the next day with her sister. The personal banker gives her a list of documents that she will need to submit with the form for opening an account. The banker advises her to open a 6 months recurring deposit.

Ask

- Do you try to save money monthly but have to spend it on unforeseen expenditure?
- Have you ever thought of depositing your savings in a bank?

Say

- Before opening a bank account, you need to know the types of accounts we have in India.
- Discuss "Types of Bank Accounts" with the participants as given in the Participant Handbook.

Ask

- Can someone say what are the different types of bank accounts?

Say

- Let's learn about the different types of bank accounts through an activity.

Team Activity

- Divide the class in four groups.
- Label the groups as savings account, current account, recurring account and fixed deposit.
- On a chart paper, ask them to write the key points of their account.

Activity De-brief

- Ask each group to present the key points of their account.

Say

- Now that you know about the four different types of accounts, let's learn how to open a bank account.
- Discuss "Opening a Bank Account" with the participants as given in the Participant Handbook.
- Discuss "Tips" that the participants should keep in mind while opening a bank account as given in the Participant Handbook.

Ask

- What are the main documents required for opening a bank account?
- What are some important points to ask the bank personnel while opening an account?

Say

- Mention officially valid KYC documents (refer to the Participant Handbook)
- Now, let's understand the procedure of opening a bank account through an activity.

Team Activity

Opening a Bank Account

- This activity is done in groups.
- Divide the class in groups of four or six.

PART 1

FILLING A BANK ACCOUNT OPENING FORM

- You have to fill a bank opening form.
- You can refer to the section "Opening a Bank Account" of your Handbook for reference.
- List all the steps that you will be required to fill in the form.
- List the documents that you needs for filling the form.
- Now fill in the form.

Activity De-brief

How did you design the form?

- What all details did you fill in the form?
- What were your KYC documents?
- How would this activity help you in future?

Do

- Instruct the participants to read the section "Opening a Bank Account' of the Participant Handbook.
- Give each group one sample account opening form.
- Give the participants 5 minutes to read the form.
- Give them 15 minutes to fill it.
- Assist them by explaining each category and how to fill it.
- Keep a check on time.
- Tell the group to wind up quickly if they go beyond the given time limit.

Summarize

Note:

- You can summarize the unit through a role play.
  - A person wanting to open an account in the bank.
  - What is the procedure that he will go through?
  - Discuss the key points of different types of bank accounts.
  - How to select the type of account
  - How to fill the account opening form.
- A sample account opening form is given in the following page for reference. Use it for the activity in the class.

Sample Bank Account Opening form.

Photograph

XXX Bank

SAVING BANK ACCOUNT OPENING FORM

Account No.: _____ Date: _____

Name of the Branch			
Village/Town			
Sub District / Block Name			
District			
State			
SSA Code / Ward No.			
Village Code / Town Code		Name of Village / Town	

Applicant Details:

Full Name	Mr./Mrs./Ms.	First	Middle	Last Name
Marital Status				
Name of Spouse/Father				
Name of Mother				
Address				
Pin Code				
Tel No. Mobile			Date of Birth	
Aadhaar No.			Pan No.	
MNREGA Job Card No.				
Occupation/Profession				
Annual Income				
No. of Dependents				

Detail of Assets	Owning House : Y/N Owning Farm : Y/N No. of Animals : Any other :
Existing Bank A/c. of family members / household	Y / N If yes, No. of A/cs. _____
Kisan Credit Card	Whether Eligible Y / N
I request you to issue me a **Rupay Card**.	
I also understand that I am eligible for an Overdraft after satisfactory operation of my account after 6 months of opening my account for meeting my emergency/ family needs subject to the condition that only one member from the household will be eligible for overdraft facility. I shall abide by the terms and conditions stipulated by the Bank in this regard.	

Declaration:
I hereby apply for opening of a Bank Account. I declare that the information provided by me in this application form is true and correct. The terms and conditions applicable have been read over and explained to me and have understood the same. I shall abide by all the terms and conditions as may be in force from time to time. I declare that I have not availed any Overdraft or Credit facility from any other bank.

Place:
Date: **Signature / LTI of Applicant**

Nomination:

I want to nominate as under				
Name of Nominee	Relationship	Age	Date of Birth in case of minor	Person authorised in case to receive the amount of deposit on behalf of the nominee in the event of my /minor(s) death.

Place:

Date: **Signature / LTI of Applicant**

Witness(es)*

1. _____

2. _____

*Witness is requires only for thumb impression and not for signature

UNIT 12.3.3: Costs: Fixed vs. Variables: What are Fixed and Variable Costs?

Unit Objectives

At the end of this unit, participants will be able to:

- Differentiate between fixed and variable costs

Resources to be Used

- Participant Handbook
- Blank sheets of paper
- Pens

Ask

- What is cost?
- Will a telephone bill fall under the category of a fixed or variable cost?

Say

- Discuss: Fixed and Variable cost with examples.Let us do a small activity.

Team Activity

Identify the type of cost

1. Rent
2. Telephone bill
3. Electricity bill
4. Machinery
5. Insurance
6. Office supplies/ Raw materials
7. Employee salaries
8. Commision percentage given to sales person for every unit sold
9. Credit card fees
10. Vendor bills

Do

- Divide the class into two groups. Read out the list of costs given in the activity.
- Read out each item from the cost list and ask the groups in turns to identify whether it is a fixed or variable cost.

Say

- We saw that your utility bills like rent, electricity, telephone etc. are all fixed costs because you have to pay it every month.
- Variable costs is an expense which varies with production output or volume. For example commission, raw material etc.
- Discuss "Cost: Fixed vs. variables" with the participants as given in the Participant Handbook.
- Illustrate the relation between the costs with a graph.

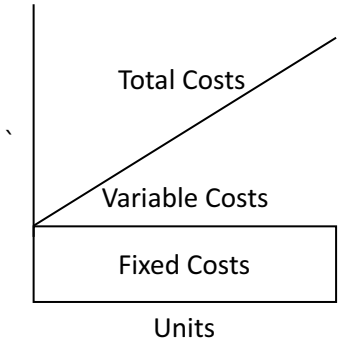

- Let's learn the difference between fixed and variable cost with the help of an activity.

Team Activity

Fixed vs. Variable Costs

- This is a group activity.

- You want to start your own entrepreneur business.
- State the type of business you want to start.
- List down all the cost or requirements for your business.
- How will you differentiate between the fixed and variable cost.

Activity De-brief

- What is the total cost of your business?
- What are the fixed costs?
- What are the variable costs?
- How did you differentiate between the fixed and variable costs?

Do

- Instruct the participants that this is group work.
- Divide the class into small groups of 4 or 6.
- Give each group a sheet of paper.
- Tell the participants that they have to start their own entrepreneur business.
- Ask them the type of business they want to start.
- Instruct them to differentiate between the fixed and the variable costs of the business they want to start.
- Give the participants 15 minutes to discuss and write.
- Keep a check on time. Tell the group to wind up quickly if they go beyond the given time limit.

Summarize

- Note: You can summarize the unit either by having a role play between a consultant and a budding entrepreneur explaining the differences between fixed and variable costs or by discussing the key points of the unit.

Notes for Facilitation

- Answers for the activity - Identify the type of cost

1. Rent (Fixed)
2. Telephone bill (Fixed)
3. Electricity bill (Fixed)
4. Machinery (Fixed)
5. Insurance (Fixed)
6. Office supplies/ Raw materials (Variable)
7. Employee salaries (Fixed)
8. Commision percentage given to sales person for every unit sold(Variable)
9. Credit card fees (Variable)
10. Vendor bills (Variable)

UNIT 12.3.4: Investments, Insurance and Taxes

Unit Objectives

At the end of this unit, participants will be able to:

- Describe the main types of investment options
- Describe the different types of insurance products
- Describe the different types of taxes

Resources to be Used

- Participant Handbook

Ask

- Ask the participants- "What do you see first thing in when you get your mobile bill? Apart from the amount and due date do you have a look at the taxes you are being billed for?
- Why do you think people get their cars insured or have a medical insurance?
- You have saved money and want to invest it, how would you decide what is the best investment for your money?

Example

- Let's have a look at a few scenarios.

Ranbir has sold his house and deposited the money in his bank. His Chartered Accountant tells him that he will have to re-invest the money otherwise he will have to pay capital tax. What is capital tax and how is it different from income tax?

Jasmeet and Anup are blessed with a baby girl. They decide to have an insurance policy that will mature when their daughter is ready to higher education.

Shivani is working in a corporate office and getting good pay. She will have to pay income tax so she decides to invest her money in tax saving schemes. She goes to the bank manager to discuss the best products in which she can invest.

Say

- Discuss the Investment, Insurance and Taxes as given in the Participant Handbook.

Ask

- How do investments, insurances and taxes differ from each other?

Say

- Let's learn the differences between the three by having an activity.

Say

- We will have a quiz today.

Team Activity

- The activity is a quiz.

Do

- Divide the class into groups of three and give a name to each group
- Explain the rules of the quiz. For each correct answer the group gets 1 mark. If the group is unable to answer the question is rolled over to the next group.
- Explain the purpose and duration of the activity.
- On the blackboard write the names of the groups.
- Ask the questions of the quiz.
- Keep a score for the groups.
- Set guidelines pertaining to discipline and expected tasks.

Summarize

- Summarize the unit by discussing the key points and answering question

Notes for Facilitation

Questions for the quiz

1. What are bonds?

   Bonds are instruments used by public and private companies to raise large sums of money.

2. Who issues the bonds?

   Private and public companies issue the bonds.

3. Why are bonds issued?

   To raise large amount of money as it cannot be burrowed from the bank.

4. Who is the buyer of stocks and equities?

   The general public is the buyer.

5. What types of scheme is the Sukanya Samriddhi Scheme?

   Small Saving Scheme

6. What is the difference between mutual and hedge funds?

   Mutual funds are professionally managed financial instruments that invest the money in different securities on behalf of investors. Hedge funds invest in both financial derivatives and/or publicly traded securities.

7. Why is a loan taken from the bank to purchase real estate?

   To lease or sell to make profit on appreciated property price.

8. Name the two types of insurances?

   Life Insurance and Non-life or general insurance

9. Which insurance product offers financial protection for 15-20 years?

   Term Insurance

10. What is the benefit of taking an endowment policy?

    It offers the dual benefit of investment and insurance.

11. Mr. Das gets monthly return on one of his insurance policies. Name the policy?

    Money Back Life Insurance

12. What are the two benefits of a Whole Life Insurance?

    It offers the dual benefit of investment and insurance

13. Which policy covers loss or damage of goods during transit?

    Marine Insurance

14. After what duration is the income tax levied?

    One financial year

15. What is long term capital gain tax?

    It is the tax payable for investments held for more than 36 months.

16. Name the tax that is added while buying shares?

    Securities Transaction Tax

17. What is the source of corporate tax?

    The revenue earned by a company.

18. Name the tax whose amount is decided by the state?

    VAT or Value Added Tax

19. You have bought a T.V. What tax will you pay?

    Sales Tax

20. What is the difference between custom duty and OCTROI?

    Custom duty is the charges payable when importing or purchasing goods from another country. OCTROI is levied on goods that cross borders within India.

UNIT 12.3.5: Online Banking, NEFT, RTGS, etc.

Unit Objectives

At the end of this unit, participants will be able to:

- Discuss the uses of online banking
- Discuss the main types of electronic funds transfer

Resources to be Used

- Participant Handbook
- Computer System with internet connection
- Debit card

Ask

- When was the last time you visited a bank?
- How do you pay your bill for electricity and telephone?
- Have you ever tried to transfer money from one bank account to another bank account using the online banking facility?

Say

- Most of us lead a busy life. Time has become more important than money. In this busy schedule no one has time to stand in bank queues. That's where Online Banking comes in. Online banking or internet banking means accessing your bank account and carrying out financial transactions through the internet.
- Discuss "What is online banking?" from the Participant Handbook.
- There are various advantages of online banking:
  - It saves time, as you need to visit the branch. .
  - You can conduct your banking transactions safely and securely without leaving the comfort of your home.
  - Online Banking also gives you round the clock access.
  - Online Banking makes it possible for you to pay your bills electronically.

Do

- Show them how they can use the internet banking.
- Use the computer system and show the demo videos on how to use internet banking provided on most banking sites. the computer system.
- Tell the class the various features of online banking:
  - Through their website set-up your online account.
  - Choose a secure username and password.
  - Set-up your contact information.
  - Once your information is verified, you are good to go.
  - Once you enter the portal explore all the features and learn your way through the portal.
- Discuss about maintaining the security of the online account.

Say

- One of the biggest advantage that online banking offers, as discussed earlier, is transferring money from one account to another. This transaction is called electronic funds transfer. Electronic transfers are processed immediately with the transferred amount being deducted from one account and credited to the other in real time, thus saving time andeffort involved in physically transferring a sum of money.
- Discuss "Electronic Funds Transfer" from the Participant Handbook.

Do

- Discuss how to transfer money from one account to another using online banking (NEFT/ RTGS, etc.).
- Illustrate with an example.

Summarize

- Close the discussion by summarizing the about online banking.
- Ask the participants if they have any questions related to what they have talked about so far.

Notes

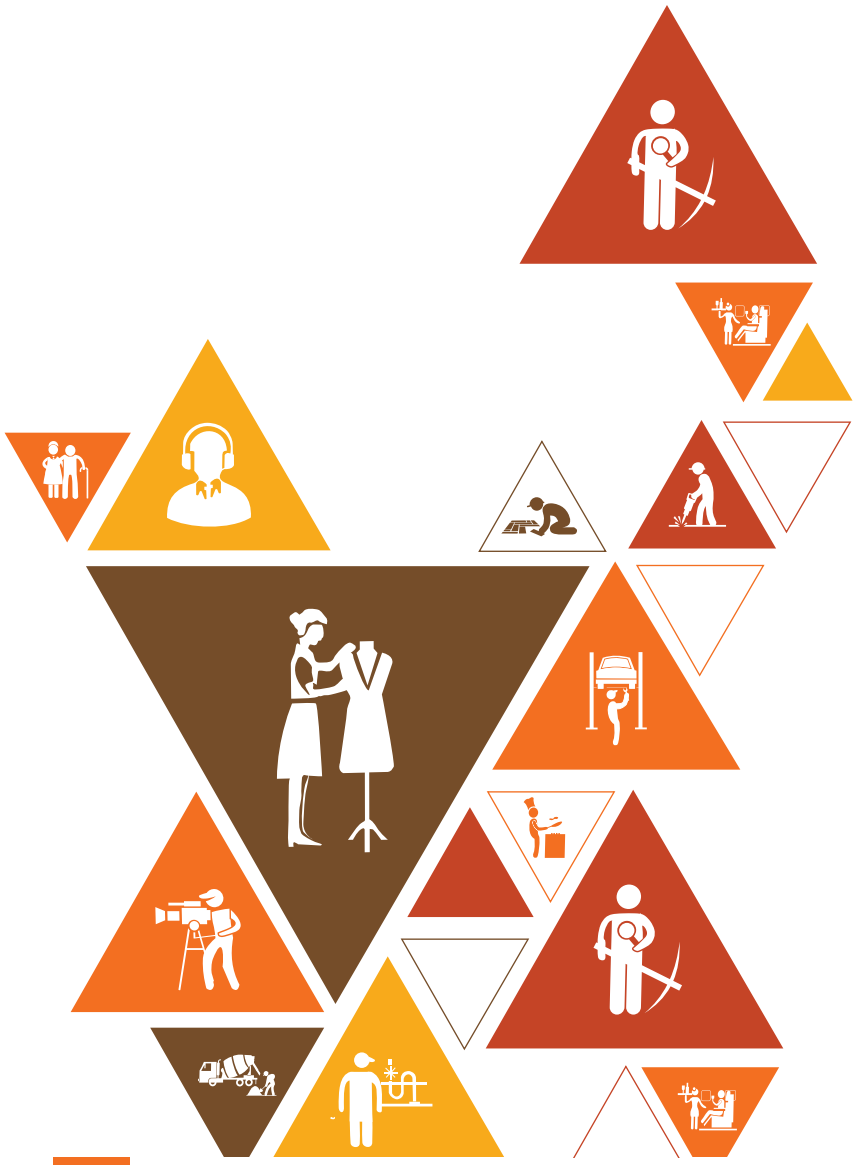

UNIT 12.4: Preparing for Employment & Self Employment

Key Learning Outcomes

At the end of this unit, participants will be able to:

1. Discuss the steps to follow to prepare for an interview
2. Discuss the steps to create an effective Resume
3. Discuss the most frequently asked interview questions
4. Discuss how to answer the most frequently asked interview questions
5. Identify basic workplace terminology

UNIT 12.4.1: Interview Preparation: How to Prepare for an Interview?

Unit Objectives

At the end of this unit, participants will be able to:

- Discuss the steps to follow to prepare for an interview

Resources to be Used

- Participant Handbook

Ask

- Have you ever attended an interview?
- How did you prepare before going for an interview?

Say

- An interview is a conversation between two or more people (the interviewer(s) and interviewee) where questions are asked by the interviewer to obtain information from the interviewee.
- It provides the employer with an opportunity to gather sufficient information about a candidate and help them select the ideal candidate.
- It also provides the interviewee with an opportunity to present their true potential to the employer, build confidence and help make a decision about the job by asking questions regarding designation, salary, perks, benefits, promotions, transfers, etc.
- Let's do an activity to understand how to prepare for interviews better.

Activity 1

- Introducing Yourself

Do

- Select a participant and ask him/her to answer the following questions: "What can you tell me about yourself."
- Give the participant at least one minute to speak.
- Once he/she is done, ask the rest of the participant what they gathered about the participant who was providing information.
- Now repeat the exercise with five other participants.

Ask

- What information you should include when you are describing or introducing yourself in an interview?
- What information you should not include when you are describing or introducing yourself in an interview?

Say

- Tell the participants that when an interviewer asks you to say something about yourself, he/she is not asking you to present your life history.
- Introduction should be short and crisp, and should present you in a positive light. It should include the following points:
  - Any work experience that you might have
  - A brief summary of your educational qualifications
  - Your strengths and achievements
  - Any special projects that you might have been part of
- The following topics should be avoided during an introduction:
  - Detailed description of your family (unless you are specifically asked to do so)
  - Too much information about your weaknesses
  - Information that is not true

Do

- Congratulate each participant for sharing their points.
- Ask the audience to applaud for them.
- Ask de-brief questions to cull out the information from each group.
- Keep a check on time.

Activity 2

- Planning the right attire

Do

- Describe 2 individuals to the participants. One is wearing a casual t-shirt, jeans, and slippers. He has not combed his hair and neither has he trimmed or shaved his beard. The other individual is dressed formally with a shirt and pant, and is well-groomed. He has also worn formal shoes and a belt. Ask the participants which person would they prefer to hire in their organization and why?

Summarize

- Close the discussion by discussing 'how to prepare for an interview' as discussed in the Participant Handbook.
- You can add the following points to it:
  - Tell the participants to create a positive and good impression in an interview. It is important for them to prepare for an interview beforehand.
  - The interviewer analyses not only your technical knowledge in relation to the job, but also whether or not you are a fit for the organization.
  - Every employer looks at the whole package and not just one or two things in isolation. Therefore, the way you dress and the way you present yourself is also important along with your skills and talents.
  - The participants will get only one chance to create a good first impression.

UNIT 12.4.2: Preparing an Effective Resume: How to Create an Effective Resume?

Unit Objectives

At the end of this unit, participants will be able to:

- Discuss the steps to create an effective Resume

Resources to be Used

- Participant Handbook
- Blank papers
- Pens

Ask

- When preparing for an interview, what are the most important things that you need to do?
- What documents do you carry with you, when you go for an interview?
- What is a resume?
- Why do you need a resume?

Say

- Resume is not just a sheet of paper with your qualifications printed on it.
- It is a selling tool that will help the employer to see how and what you can contribute for company.
- Talk about the steps involved in creating an effective/attractive resumes discussed in the Participant Handbook.
- Now let's prepare a resume to understand the process in a better way.

Do

- This is an individual activity.
- Give the details of the activity.
- Instruct them to read the activity carefully.
- The participant is expected to make an attractive resume based on the information provided.
- Give the class 25-30 minutes to study the case and create a resume.
- At the end of 30 minutes, the participants should exchange the resume with the person sitting next to him or her.
- Every participant will evaluate the resume prepared with their fellow participants.

Say

- Do you think the candidate should apply for the job posting described in the advertisement?
- We have already discussed the steps involved in creating an effective/attractive resumes.
- Now let's prepare a resume for the candidate details given in the activity.

Activity

Case Study Analysis

- In the first section of the activity, you are being given the information about a candidate who is applying for a particular job.
- In the second section, you are being given the detailed description of the job posting. Create a resume for the candidate to apply for the job posting.
- Use the information that has been provided about the candidate to create this resume.

Candidate Details

Nipesh Singla was born on 20th April, 1988 in Chandigarh, India. He currently resides at 1XX7, Sector XX D, Chandigarh –160018. His mobile number is 988XXXXX01, and e-mail address is nxxxxxxxxxla@gmail.com. Nipesh attended middle and senior school at Government Boys Senior Secondary School, Sector 15, Chandigarh. He has been a very talented boy since school. He was fond of painting and watching old Hindi movies. As part of a school charity program, he volunteered at the children's hospital during his senior years.

In July 2007, he joined Westwood School of Hotel Management, Zirakpur to pursue a diploma course in Hotel Management and Catering. After completing this course, he joined XYZ Group of Hotels as a Housekeeping intern in June 2010 for six months. In this role, he was responsible for cleanliness and maintenance of one floor in the hotel. Taking advantage of his strong interpersonal skills, he also got opportunities to make housekeeping arrangements for corporate meetings. While pursuing education, he gained working knowledge of Microsoft Word, Excel, Access and PowerPoint.

Nipesh is detail-oriented, flexible and adaptable. He has successfully worked with a diverse work force. He gelled well with his peers, both in college and during his internship. After completing the internship, his objective has been to find a job opportunity where he can use his skills and experience. Backed by experience, he is confident about his skills as housekeeping assistant.

Job Posting

* Do you see yourself as a HOUSEKEEPING SUPERVISOR?

What's your passion? Whether you're into cricket, reading or hiking, at IHG we are interested in YOU. At IHG, we employ people who apply the same amount of care and passion to their jobs as they do in their hobbies - people who put our guests at the heart of everything they do. And we're looking for more people like this to join our friendly and professional team.

THE LOCATION:

At the moment, we are looking for HOUSEKEEPING SUPERVISOR to join our youthful and dynamic team at Holiday Inn Amritsar, Ranjit Avenue in Amritsar, Punjab (India). Holiday Inn Amritsar is ideally located in Amritsar's commercial district on Ranjit Avenue with the world famous Golden Temple located only a short distance away. Sparkling chandeliers mark an incomparable arrival experience as you escape to the welcoming environment that is, Holiday Inn Amritsar. The fresh international brand to celebrate and explore Amritsar.

Salary: Negotiable

Industry: Travel / Hotels / Restaurants / Airlines / Railways

Functional Area: Hotels , Restaurants

Role Category: Housekeeping

Role: Housekeeping Executive/Assistant.

Desired Candidate Profile

Friendly, pleasant personality, Service - oriented.

You should ideally be Graduate/ Diploma holder in HM and at least 2 years of experience as a supervisor in good brand with good communication skills, English is a must.

In return we'll give you a competitive financial and benefits package. Hotel discounts worldwide are available as well as access to wide variety of discount schemes and the chance to work with a great team of people. Most importantly, we'll give you the room to be yourself.

*Please get in touch and tell us how you could bring your individual skills to IHG.

Education-

UG: Any Graduate/ Diploma holder

PG: Post Graduation Not Required

Say

- Now, let's share the resume with the fellow participant sitting next to you and evaluate each other's effort.

Do

- Congratulate each participant for making their first attempt towards creating an effective resume.
- As a follow up activity, you can suggest them to prepare their own resume and show it to you the next day.

Summarize

- Close the discussion by showing some effective resume samples to the candidates.
- Ask the participants what they have learnt from this activity.
- Ask if they have any questions related to what they have talked about so far.

Notes for Facilitation

- Keep printed copies of the activity ready for the session.
- Put down the suggested format of the resume on the board while explaining the steps in preparing a resume.
- Do check the participants' resume and suggest necessary changes.
- Suggested example for the case presented:

Nipesh Singla

#1XX7, Sector XX-D

Chandigarh-160018

Mobile No: 91-988XXXXX01

E-mail: nxxxxxxxxxla@gmail.com

Objective: Seeking an opportunity to use my interpersonal skills and experience to contribute to your company's growth, profitability and objectives.

Professional strengths:

- Proficient in housekeeping
- Experienced in and capable of working with a diverse work force
- Team player and friendly in nature
- Successful working in a multi-cultural environment

- Detail oriented, flexible, and adaptable
- Knowledge of Microsoft Word, Excel, Access and PowerPoint

Educational background:

- Diploma in Hotel Management and Catering, Westwood School of Hotel Management, Zirakpur
- High School, Government Boys Senior Secondary School, Sector 15, Chandigarh

Professional internships:

- Housekeeping Intern, XYZ Group of Hotels, New Delhi (June 2010 – August 2010)
    - Responsible for cleanliness and maintenance of one floor in the hotel.
    - Got opportunities to make housekeeping arrangements for corporate meetings.

Volunteer Work:

- Student volunteer at children's hospital in Chandigarh.

Nipesh Singla

UNIT 12.4.3: Interview FAQs

Unit Objectives

At the end of this unit, participants will be able to:

- Discuss the most frequently asked interview questions
- Discuss how to answer the most frequently asked interview questions

Resources to be Used

- Participant Handbook

Say

- Tell the participants you will provide them with interview situation and questions and they have to try to answer them.
- Tell them you will also explain the different ways to approach these questions.

Do

- Divide the class in pairs and ask the participants to perform a role play.
- One partner will play the role of the interviewer while the other will play the role of the interviewee.
- Tell them the interviewer can start the interview by asking the interviewee to introduce himself/herself.
- Call all the pairs one by one in front of the class to enact the role play.
- Follow the same pattern for all other situations.
- Time allotted for each situation is 8-10 minutes.
- Congratulate each participant for giving their input.
- Ask the class to applaud each time a team has completed their role play.
- Keep a check on time.

Role Play

Conduct a role play for the situation given.

Situation 1

- The interviewer will start by asking the interviewee a few generic questions such as:
  - What is your name?
  - Tell me something about yourself?
  - Can you tell me something about your family?
- Then, the interviewer will bluntly ask the following questions:
  - How do you explain this huge time gap in your resume?
  - What is the reason for this?
  - Weren't you looking for a job or is it that no one selected you?

Say

De-brief:

- When you put information on your resume, you should be prepared to answer any questions about it.
- Be present and focused on the questions being asked to you.
- One way of tackling the blunt questions is to tell the interviewer you did not come across an opportunity where you were sufficiently satisfied with both the remuneration offered as well as the profile. Therefore, you waited for the right opportunity to come along while looking for an ideal job.

Role Play

Conduct a role play for the situation given.

Role Play – Situation 2

- The interviewer will start by asking the interviewee a few generic questions such as:
  - What is your name?
  - Tell me something about yourself?
  - Can you tell me something about your family?
- Then, at the end of the interview, ask the interviewee:
  - There are over 200 people who have applied for this job, some with excellent work experience. Why should I hire you?

Say

De-brief:

- There is nothing wrong with stating your strengths and achievements. However, do not come across as arrogant or too boastful.
- You need show the interviewee that you have unique skills or talents to contribute to the company. The interviewer needs to know how you stand apart from the rest of the crowd.
- Tell the interviewer you are looking forward to working with the company and that you are a hard-working individual.

Role Play

Conduct a role play for the situation given.

Role Play – Situation 3

- The interviewer will start by asking the interviewee a few generic questions such as:
  - What is your name?
  - Tell me something about yourself?
  - Can you tell me something about your family?
- Then, lean forward, clasp your hands on the table and in a soft voice ask the interviewee:
  - Did you ever experience any neglect or disregard from your previous office? In other words, did you ever suffer because your office or team displayed favouritism?

Say

De-brief:

- Keep this in mind: Do not criticize anyone during an interview.
- You are free to express your opinion, however, your language, answers, body language, and the tone of your voice should remain constructive and neutral.
- Since criticism will show you in negative light, you should keep your answers honest yet diplomatic.
- You can tackle such questions by saying, “I got along well with most of my faculty and peers.”

Role Play

Conduct a role play for the situation given.

Role Play – Situation 4

- The interviewer will start by asking the interviewee a few generic questions such as:
  - What is your name?
  - Tell me something about yourself?
  - Can you tell me something about your family?
- Then very bluntly ask the interviewee:
  - How long do you plan to stay with this company if you are selected?
- After the candidate responds, ask sarcastically:
  - Do you seriously mean that?

Say

De-brief:

- Don't provide unreal and idealistic answers.
- Your answers should be honest yet diplomatic. In a situation like this, the interviewer does not expect you to provide a specific timeline.
- You can say something like, "I would like to stay with the company as long as I can contribute constructively and develop as an employee, within the organization, professionally and financially."

Role Play

Conduct a role play for the situation given.

Role Play – Situation 5

- The interviewer will start by asking the interviewee a few generic questions such as:
  - What is your name?
  - Tell me something about yourself?
  - Can you tell me something about your family?
- Ask him/her how important he/she thinks it is to be punctual in the corporate world.
- After he/she answers, look up sternly at the interviewee and in a crisp voice, say:
  - You were late for this interview by 10 minutes. That surely does not seem to be in line with what you just said?

Say

De-brief:

- Politely apologize for being late.
- You can add something such as, "I assure you this is not a habit". All your future actions should be in line with this statement.
- Avoid giving any excuses.
- You might feel obligated to provide a justification for your tardiness, but the interviewer is not interested in that.
- Do not over apologize. Once this response is out of the way, turn your focus back to the interview.

Role Play

Conduct a role play for the situation given.

Role Play – Situation 6

- The interviewer will start by asking the interviewee a few generic questions such as:
  - What is your name?
  - Tell me something about yourself?
  - Can you tell me something about your family?
- After asking a few academic or job-related questions, ask the interviewee:
  - If you get this job, what salary package do you expect us to give you?

Say

De-brief:

- If there is no way for you to avoid this question, respond to the interviewer by providing a reasonable and well-thought out salary range.

Role Play

Conduct a role play for the situation given.

Role Play – Situation 7

- The interviewer will start by asking the interviewee a few generic questions such as:
  - What is your name?
  - Tell me something about yourself?
  - Can you tell me something about your family?
- Then, bringing the interview to a close, ask the interviewee:
  - Do you have any questions for me?

Say

De-brief:

- Ask relevant questions.
- Don't bombard the interviewer with questions.
- If you have questions about the result of the interview, you can limit your questions to 1 or 2. Keep them short and relevant like:
  - When will I be informed about the results of the interview?
  - What are the working hours?
  - Will the job require me to travel?

Explain

- Tell the participants to be prepared for answering different types of questions in an interview.
- Stay calm and focused, and take a moment to think about how you should respond. Always maintain a confident tone.
- Even if you don't intend to, your body language conveys your level of discomfort with a particular question. Try to keep your actions, tone, and gestures neutral.
- Maintain your composure while answering personal question.

Do

- Tell all the participants to form pairs again.
- Tell them to use the following list of frequently asked interview questions to conduct mock interviews.
- They will use all or some of these questions to conduct mock interviews with their partners.
- One partner will play the role of the interviewer while the other will play the role of the interviewee.
- After they are through asking and answering the questions, the roles will be reversed.
- The same list of questions will be used again.
- After each mock interview ask the interviewer to provide feedback and clear any doubts that may arise.
- Time allotted for each situation is 30-35 minutes.

Activity

Mock Interview Questions

Mock Interview Questions
Tell me something about your family.
What qualities would you look for in a Manager or a Supervisor?
Why did you apply for this job?
What do you know about this company?
How do you deal with criticism?
How do you plan to strike a good work-life balance?
Where do you see yourself five years from now?
Have you applied for jobs in other companies?
What kind of salary do you expect from this job?
Do you have any questions for me?

Summarize

- Close the discussion by discussing the questions in the both activities.
- Ask the participants what they have learned from this activity.
- Ask if they have any questions related to what they have talked about so far.

UNIT 12.4.4: Work Readiness – Terms and Terminology

Unit Objectives

At the end of this unit, participants will be able to:

- Identify basic workplace terminology

Resources to be Used

- Participant Handbook
- Chart papers
- Blank sheets of paper
- Pens

Ask

- What do you understand by workplace terminology?
- Are offer letter and contract of employment the same?

Say

- Let's start this unit with an activity.

Team Activity

Workplace terminology

- This is a group activity conducted in three parts.

Part 1

Sheila received a call from the recruiter of MND Company. Before she is recruited by the company, think of the recruitment process she will have to go through. Start from the telephone call to signing her letter of acceptance. Write down all the words that come to your mind.

Activity De-brief

- Have the participants read out the words they have written
- Encourage all the participants to participate in the activity

Do

- Divide the class into small groups of 4 or 6.
- Instruct the participants that they will be doing a brainstorming activity.
- Give them one chart paper each. Tell them to divide the chart in two parts.
- Instruct them that they have to use one half of the chart paper now. The other half will be used later.
- The participants have to write all the words that come to their mind related to the recruitment process.
- Give them 10 minutes to do the activity.
- Tell them that there are no right or wrong answers.
- Keep a track of the time.

Say

- You all know quite a few words related to the terms used in the office.
- Let us talk about some new terms that have been missed out.
- Discuss "Work Readiness – Terms and Terminology" with the participants as given in the Participant Handbook.

Ask

- Why is it important to know the workplace terms?
- How do they help?
- Can the words be categorised further?

Say

- Let's now continue the activity.

Team Activity

Terms and Terminology

- This is again a group activity. The members of the group remain the same as in Activity 1.

Part 2

With the help of the new terms you have learned, make a flow chart of the hiring process of MND Company.

Activity De-brief

- Ask the groups to share the flow charts and the new terms they added while preparing the flow chart.

Do

- Instruct the participants that they have to use the 2nd half of the same chart they had used before.
- Using the new terminology and the terms they had previously written on the chart, they have to make a flow chart of the hiring process of the MND Company.
- Give them 10 minutes for this activity.
- Keep a check on time. Tell the group to wind up quickly if they go beyond the given time limit.

Say

- Let's go ahead with the activity.

Team Activity

Terms and Terminology

- The activity continues with the same group members.

Part 3

Sheila now works for the MND Company. She is not aware of the company culture and policies. She goes to the HR Department to get her doubts clarified. Can you think of the terms for which she wants clarity? Make a list of those words.

Activity De-brief

- Ask the groups to share their list of words. Some of the words are benefits, comp. time, deduction, employee training, holidays, lay-off, leave, maternity leave, mentor, notice, paternity leave, and time sheet.

Do

- Instruct the participants to identify the key terms an employee of a company should know. They can use the same chart paper for this activity.
- Give them 5 minutes for this activity.
- Keep a check on time. Tell the group to wind up quickly if they go beyond the given time limit.

Summarize

- Note: You can either summarize the key points of the unit or have a role play where an employee has just joined a company and the HR Manager explains the terms of employment.

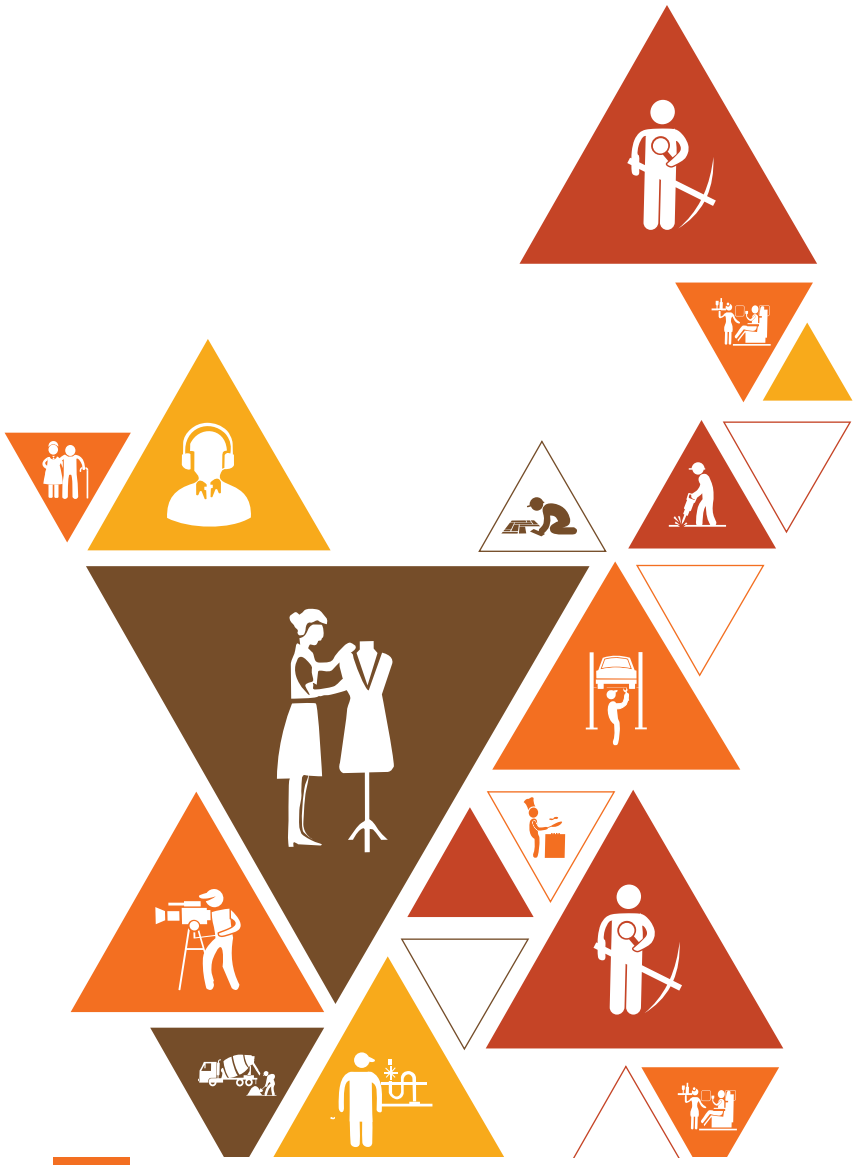

UNIT 12.5: Understanding Entrepreneurship

Key Learning Outcomes

At the end of this unit, participants will be able to:

1. Discuss the concept of entrepreneurship
2. Discuss the importance of entrepreneurship
3. Describe the characteristics of an entrepreneur
4. Describe the different types of enterprises
5. List the qualities of an effective leader
6. Discuss the benefits of effective leadership
7. List the traits of an effective team
8. Discuss the importance of listening effectively
9. Discuss how to listen effectively
10. Discuss the importance of speaking effectively
11. Discuss how to speak effectively
12. Discuss how to solve problems
13. List important problem solving traits
14. Discuss ways to assess problem solving skills
15. Discuss the importance of negotiation
16. Discuss how to negotiate
17. Discuss how to identify new business opportunities
18. Discuss how to identify business opportunities within your business
19. Explain the meaning of entrepreneur
20. Describe the different types of entrepreneurs
21. List the characteristics of entrepreneurs
22. Recall entrepreneur success stories
23. Discuss the entrepreneurial process
24. Describe the entrepreneurship ecosystem
25. Discuss the purpose of the Make in India campaign
26. Discuss key schemes to promote entrepreneurs
27. Discuss the relationship between entrepreneurship and risk appetite
28. Discuss the relationship between entrepreneurship and resilience
29. Describe the characteristics of a resilient entrepreneur
30. Discuss how to deal with failure

UNIT 12.5.1: Concept Introduction (Characteristic of an Entrepreneur, types of firms/ types of enterprises)

Unit Objectives

At the end of this unit, participants will be able to:

- Discuss the concept of entrepreneurship
- Discuss the importance of entrepreneurship
- Discuss the characteristics of an entrepreneur
- Describe the different types of enterprises

Resources to be Used

- Participant Handbook

Say

- Let's start this session with some interesting questions about Indian entrepreneurs.

Team Activity

Quiz Questions

1. Who is the founder of Reliance Industries?
   Dhirubhai Ambani
2. Who is the Chairman of Wipro Limited?
   Azim Premji
3. Who launched e-commerce website Flipkart?
   Sachin Bansal and Binny Bansal
4. Who is the founder of Paytm?
   Vijay Shekhar Sharma
5. Who is CEO of OLA Cabs?
   Bhavish Aggarwal
6. Who is the founder of Jugnoo?
   Samar Singla (autorickshaw aggregator)
7. Who is the founder of OYO Rooms?
   Bhavish Aggarwal

Do

- Tell them that you will ask them few questions about a few entrepreneurs.
- Divide the class in to two groups.
- In turns ask the quiz questions to the groups.
- If the answer is incorrect pass the question to the other group.
- Share the answer if the groups are not able to answer.
- Congratulate the participants who answered correctly.

Ask

- What do you understand by entrepreneurs?
- What is the importance of entrepreneurship in today's scenario?
- What do you think are the characteristics of successful entrepreneurs?
- What are different types of enterprises that an entrepreneur in India can own and run?

Say

- Talk about entrepreneurs, importance of entrepreneurship, characteristics of successful entrepreneurs, and different types of enterprises in India as discussed in the Participant Handbook.
- Tell the participants, stories of successful Indian entrepreneurs- their struggles, the moments of heartbreak, the perseverance and triumph.
- Ask them if they know of any such entrepreneur.

Summarize

- Close the discussion by summarizing about the opportunities for entrepreneurs in India.

Notes for Facilitation

- Check out different Government schemes for small entrepreneurs. Share the information with the participants.
- You can tell them about the government websites like Start Up India, mudra.org.in etc.
- Discuss about various schemes and policies by the Government of India for entrepreneurs.

UNIT 12.5.2: Leadership and Teamwork

Unit Objectives

At the end of this unit, participants will be able to:

- List the qualities of an effective leader
- Discuss the benefits of effective leadership
- List the traits of an effective team

Resources to be Used

- Participant Handbook
- Blank sheets of paper
- Pens

Do

- Show the picture given below to the class.
- Ask them to quickly write on a piece of paper what comes to their mind after seeing the picture.
- Now ask them, "What do you understand from this picture?"
- Encourage participants to share their thoughts.

Say

- This picture depicts the qualities of a leader and the difference between a leader and a boss.
- A boss focuses on structure and inspires fear whereas a leader follows vision and generates enthusiasm.
- A boss blames employees for the breakdown whereas a leader fixes breakdowns.
- A boss depends on authority whereas a leader depends on goodwill.
- A boss says "I" and a leader says "We."
- A boss drives employees whereas a leader coaches them.
- A boss takes credit whereas a leader gives credit.

Say

- Talk about leadership and leadership qualities for an entrepreneur as discussed in the Participant Handbook.

Ask

- Why is it important for a leader to be effective? How does it help the organization?

Say

- Let us discuss benefits of effective leadership as discussed in the Participant Handbook.
- "Out-of-the-box thinking" is one of the new leadership styles. It means thinking differently and from a new perspective.

Ask

- Do you consider yourself a team player?

Team Activity

Long Chain

- This is a group activity.

Do

- Divide the class into 2 teams.
- Ask each team to create a chain using materials they have in class such as shoe laces, belts, paper, handkerchief, ribbons, etc.
- The team that creates the longest chain wins the game.
- Observe if the participants are interacting with their team or working in isolation.
- Share your observations with the class.

Say

De-brief:

- What did the winning team do differently?
- Who was responsible for the winning team's success?
- How does this activity explain the role of teamwork in entrepreneurial success?

Say

- Tell the class that both the teams performed well.
- Discuss that the objective of this activity was to open communication channels and how this has been achieved.
- The participants should aim to keep the communication channels open when interacting with their peers and team members.
- It will set the pace and enthusiasm required for all the ensuing teamwork activities.
- Talk about teamwork and importance of teamwork in entrepreneurial success as discussed in the Participant Handbook.

Summarize

- Close the discussion by summarizing about the importance of teamwork for employees.
  - Teamwork helps in reducing stress for the employees.
  - Teamwork helps employers in generating more number of solutions to a problem and developing improved communication amongst employees.
- Ask the participants what they have learned from these exercises.
- Ask if they have any questions related to what they have talked about so far.

UNIT 12.5.3: Communication Skills: Listening & Speaking: The Importance of Listening Effectively

Unit Objectives

At the end of this unit, participants will be able to:

- Discuss the importance of listening effectively
- Discuss how to listen effectively
- Discuss the importance of speaking effectively
- Discuss how to speak effectively

Resources to be Used

- Participant Handbook

Activity 1

Activity – Chinese Whisper

Step 1: Form a circle.
Step 2: Start a whisper chain. Any one participant will whisper a message into his/her neighbour's ear. No one else must hear the message. The message can be serious or downright silly.
Step 3: The next person who first heard the message should whisper the message very quickly to the person sitting next to them.
Step 4: The game goes on until the last person says whatever they heard out loud and the first person reveals the real message.
Compare them and have a great laugh!

Ask

De-brief questions:

- Was the original message the same as the message that is communicated at the end of the game?
- Why do you think there was a difference in the messages?

Say

- No, the original message was not same at the end of game.
- The barriers to communication like language, disturbance and noise, poor listening skills, boredom, poor speaking skills, etc. are the potential reasons this happens.
- There are various aspects to communication. Speaking skills and listening skills are two major components to any communication. There is always some room for improvement in the way we communicate.
- It is important to accept the reality of miscommunication and work to minimise its negative impacts.

Say

- Communication is a two-way process where people exchange information or express their thoughts and feelings
- It involves effective speaking and effective listening.
- If I go to the store to get bread, I exchange money for the bread. I give something and get something in return. Communication takes place in the same manner. You have to provide and receive information for communication to take place.

Ask

- How often do you hear these statements?
  - "You're not listening to me!"
  - "Why don't you let me finish what I'm saying?"
  - "You just don't understand!"
- What do you think the other person is trying to convey to you through these sentences?
- We will not talk about the importance of listening effectively as discussed in the Participant Handbook.

Say

- Let's play a game to understand effective listening process better.

Do

- This is a class activity.
- The participants need to answer the questions they hear.
- Instruct them to listen carefully.
- You will read it at a stretch and if need be repeat it once more.
- Tell the participants to raise their hand if they know the answer to the question asked.
- Keep a check on time.

Activity 2

Riddles:

Is there any law against a man marrying his widow's sister?
If you went to bed at eight o'clock at night and set the clock's alarm to ring at nine o'clock, how many hours of sleep would you get?
Do they have a 26th of January in England?
If you had only one match and entered a dark room that had a kerosene lamp, oil heater, and a wood stove, what would you light first?
The Delhi Daredevils and the Chennai Super Kings play five IPL matches. Each wins three matches. No match was a tie or dispute. How is this possible?
There was an airplane crash. Every single person died, but two people survived. How is this possible?
If an airplane crashes on the border of two countries, would unidentified survivors be buried in the country they were travelling to or the country they were travelling from?
A man builds an ordinary house with four sides except that each side has a southern exposure. A bear comes to the door and rings the doorbell. What is the colour of the bear?

Answers:

There's no law against a man marrying his widow's sister, but it would be the neatest trick in the book since to have a widow, the man would have to be dead.
You'd get one hour's sleep since alarm clocks do not know the difference between morning and night.
Oh, yes. They have a 26th of January in England. They also have a 27th, a 28th, and so on.
First of all, you would light the match.
Who said the Delhi Daredevils and the Chennai Super Kings were playing against each other in those games?
Every SINGLE person died, but those two were married.
You can't bury survivors under any law especially if they still have enough strength to object.
The bear that rang the doorbell would have to be a white bear. The only place you could build a house with four southern exposures is at the North Pole where every direction is in South.

Ask

De-brief question:

- What were the barriers that came into your way of listening?
- How can you overcome barriers to listening?

Say

- There is a difference between hearing and listening.
- If you don't listen properly, the message may be misunderstood.
- Be open-minded while listening to someone.
- It is important to listen effectively and carefully without making assumptions.

Activity 3

Elevator Pitch:

You are in the lift of a hotel and you bumped into your former client who is a famous businessman. He has financed a lot of small business ventures and can finance your new start-up too. After exchanging pleasantries, he asks you what your new company does. You open your mouth, and then pause. Where do you even begin?

Then, as you try to organize your thoughts, his meeting is called, and he is on his way. If you would been better prepared, you're sure that he would have stayed long enough to schedule a meeting with you too.

If you were given another chance, what would you have said to this person?

Do

- Start off the task by providing a beginning sentence to get the story started, and then go around the classroom getting each one to add a new sentence to keep the story going.
- This task should be done spontaneously allowing only a little time to think (30 seconds).
- For example: **There was once a student who was looking for a job after graduation.**

Notes for Facilitation

- Tell the participants to follow these steps to create a great pitch, but bear in mind that you'll need to vary your approach depending on what your pitch is about.

  1. **Identify Your Goal:** Start by thinking about the objective of your pitch. For instance, do you want to tell the potential clients about your organization? Do you have a great new product idea that you want to pitch to an executive or do you want a simple and engaging speech to explain what you do for a living?
  2. **Explain What You Do:** Start your pitch by describing what your organization does. Focus on the problems that you solve and how you help people. Ask yourself this question as you start writing: what do you want your audience to remember most about you? Keep in mind that your pitch should excite you first. After all, if you don't get excited about what you're saying neither will your audience. People may not remember everything that you say, but they will likely remember your enthusiasm.
  3. **Communicate Your USP:** Your elevator pitch also needs to communicate your unique selling proposition or USP. Identify what makes you, your organization or your idea unique. You'll want to communicate your USP after you've talked about what you do.
  4. **Engage with a Question:** After you communicate your USP, you need to engage your audience. To do this, prepare open-ended questions (questions that can't be answered with a "yes" or "no" answer) to involve them in the conversation. Make sure that you're able to answer any questions that he or she may have.
  5. **Put it all Together:** When you've completed each section of your pitch, put it all together. Then, read it aloud and use a stopwatch to time how long it takes. It should be no longer than 20-30 seconds. Remember, the shorter it is, the better!

Example:

Here's how your pitch could come together:

"My company deals with cloth retail online business and we use various e-commerce platforms to sell our products. This means that you can do shopping with ease and spend time on other important tasks. Unlike other similar companies, we have a strong feedback mechanism to find out exactly what people need. This means that, on average, 95 percent of our clients are happy with our products. So, how can you help us in creating our own web portal?

  6. **Practice:** Like anything else, practice makes perfect. Remember, how you say it is just as important as what you say. If you don't practice, it's likely that you'll talk too fast, sound unnatural or forget important elements of your pitch. Set a goal to practice your pitch regularly. The more you practice, the more natural your pitch will become. Practice in front of a mirror or in front of colleagues until the pitch feels natural.

Summarize

- Close the discussion by summarizing how to speak effectively as discussed in the Participant Handbook.

UNIT 12.5.4: Problem Solving & Negotiation Skills

Unit Objectives

At the end of this unit, participants will be able to:

- Discuss how to solve problems
- List the important problem solving traits
- Discuss ways to assess problem solving skills
- Discuss the importance of negotiation
- Discuss how to negotiate

Resources to be Used

- Participant Handbook

Ask

- What is a 'problem'?
- What do you think are the problems you may face in the process of becoming a successful entrepreneur?

Say

- Discuss the definition of problem as given in the Participant Handbook.
- In a hurdle race the hurdles are the obstacles on the way to reach your goal.
- Similarly, obstacles are the hurdles you may face while reaching your goal i.e. to set-up your own business. Your goal will be to reach the finishing line after crossing these hurdles.

Ask

- What do you do when you face a problem?
- How do you resolve it? You can pick examples from the question asked previously 'the problems they are likely to face in the process of becoming a successful entrepreneur'.

Say

- Discuss how to solve problems as given in the Participant Handbook.

Team Activity

- This is a group activity.
- The groups will solve the problem and come up with the best solution in each case.

1. Unable to arrange for some extra finance for setting up a beauty parlour. The loan sanctioned and disbursed is not enough. You have tried all your contacts, friends and relatives. But unable to manage the extra amount. Bank will not sanction more amount as you have used up the complete sanction limit.
2. You have rented a space for your business and all arrangements are done. You will be operating from the office space rented in two days. Now the owner comes up to you and says he wants to sell the place and wants you to vacate in 15 days.
3. You have just set up your business and need extra human resource. You have tried invieing a few also tied up with an agency for getting the right candidate. But you are unable to get the right candidate. If the candidate is good, you cannot offer the salary demanded. If the candidate agrees to the salary, he/she has other demands like working hours to be reduced, leaves etc. which may not work for your set up.

Do

- Divide the class into three groups. Give one scenario to each group.
- Explain the purpose and duration of the activity.
- Ask the groups to build on the scenario and present their solution as a role play.

Say

De-brief questions:

1. What was the problem?
2. Is there any other alternative solution?
3. Is this the best solution presented?

Ask

- Try to think of some people around you who are able to solve problems very easily. Even you or your friends might be approaching them when there is a problem. What qualities do they have? What personality traits do such people possess?

Say

- Discuss the important traits for problem- solving as given in the Participant Handbook.

Ask

- In order to build a successful organization, you need to hire people who possess good problem solving skills. How would you assess the level of problem solving skills of potential candidates before hiring them?

Say

- Discuss how to assess for problem- solving skills as given in the Participant Handbook.

Summarize

- Ask the participants the things that they have learnt so far.
- Ask if they have any questions related to what they have talked about so far.
- Summarize the discussion on problem solving.

Activity

- The activity is to organise an election event. Select three volunteers from the group. They have to give a speech on their election manifesto to the class. They have to negotiate with the fellow participants and convince them to vote for them. The best negotiator will win the election.

Do

- Ask three participants to volunteer for the activity.
- Explain the purpose and duration of the activity.
- Set guidelines pertaining to discipline and expected tasks.

Ask

- Out of the three contestants, whom would you support? Why? What did they say or do which convinced you to make your decision?
- Have you ever tried to negotiate in your personal or professional life?
- Ask the class to share some of their experiences where they have been able to strike a deal by negotiating.

Say

- Discuss "What is Negotiation?" as given in the Participant Handbook.

Ask

- Why is it important to negotiate? As an entrepreneur, where do you think that negotiation skills will be needed?

Say

- Discuss the importance of negotiation while starting a business as given in the Participant Handbook.

Say

- Discuss the important steps to negotiate as given in the Participant Handbook.

Role Play

- Conduct a role play activity.
- Ask the participants to assemble together.
- Explain the purpose and duration of the activity.
- Set guidelines pertaining to discipline and expected tasks.

Do

- Divide them into groups of four (4) (depending on the batch size).
- Give them the hand-outs for role play scenarios.
- Two groups to be given scenarios on problem solving.
- Other two groups to be given scenarios on negotiation.
- The groups will build on the scenarios and prepare for the role play.
- Give the groups atleast 5 mins to discuss and be ready with the role play.
- Invite each group one by one to come and present their role play.

Problem solving Scenario 1

Avinash has a Mobile Repair Store in Allahabad. His outlet is one of the most popular one in the vicinity and he has great rapport with his customers. He is always well-dressed, jovial and full of energy.

It's around 11 AM, when a customer barges in to the shop and starts shouting at Avinash for giving her back the instrument which is still not working. The screen of her mobile is also cracked from one side. Avinash remembered thoroughly checking the handset before handing it over to the customer. The customer threatens to sue the company and to go to Consumer Court for cheating her.

Problem solving Scenario 2

You are running a successful small scale business, Shreeji Aggarbattis,. Your staff members do door to door selling and organise marketing campaigns in local markets. Your brand has established it's name in last few years.

Recently, lot of customers have been coming to you and lodging complaints that your staff members indulge in malpractices. Few of them informed you that a staff member engaged them in a friendly conversation. In the meanwhile, the other gave them lesser packets of aggarbattis than they paid for.

Another set of customers lodged complaint about the misconduct and rude behaviour of a particular staff member.

You often hear from your customers that the orders don't get delivered on time or wrong products get delivered.

You have already been struggling with shortage of staff and such complaints are a serious concern as it is hampering your brand image. What strategies will you adopt to solve this problem?

Negotiation Scenario 1

You have interviewed a prospective new employee who could be a key member of your new entrepreneurial venture. The new person is demanding a salary that is 20% higher than you thought based on your business plan. Finances are tight, yet you believe this person could make a significant impact on future profits. If you paid the required salary for the new person, then you would have to restructure your entire business plan. You've been searching for an individual with this skill level for three months. to the candidate is waiting for your response. Now you have to call him in to make the final negotiations.

Negotiation Scenario 2

You are a young entrepreneur who has just registered his start up project and applied for a bank loan accordingly. You receive a letter saying that your loan application has been rejected as your start up idea did not appeal to the bank and they think that it is not a revenue generating model. You have taken an appointment to meet the manager and show your negotiation skills to get your loan approved.

Notes for Facilitation

Facilitating Role Plays

Preparing for the activity

1. Carefully review the details of the scenario and the character descriptions.
2. Become familiar with the key issues being addressed in the scenario.
3. Study the provided material so that you are ready to address issues related to the situations depicted in the role-plays.
4. Anticipate and know how to address issues participants might raise during the activity.

Conducting the activity

1. Introduce the activity. Emphasize that role-playing provides participants with an opportunity to apply their new knowledge, skills, and tools in situations that simulate actual interactions with customers.
2. Ask participants to form pairs. Direct the members of each group to choose who will play the roles. Remind the groups that each participant should be given the opportunity to play/practice the different roles.
3. Conduct a demonstration so that participants become familiar with the expectations related to the roles and support materials.
4. Give the pairs/ groups 10 to 15 minutes to conduct the role-play (depending on the duration of the session).
5. After all the groups have finished with the role-play, conduct a debriefing session on each role-play.
6. Ask the groups to take five minutes to talk about what happened during the role-play. The groups should discuss the questions given in the debriefing for each role-play. Encourage participants to provide constructive criticism during their discussions.

Summarize

- Wrap the unit up after summarizing the key points and answering questions.

UNIT 12.5.5: Business Opportunity Identification: Entrepreneurs and Opportunities

Unit Objectives

At the end of this unit, participants will be able to:

- Discuss how to identify new business opportunities
- Discuss how to identify business opportunities within their business

Resources to be Used

- Participant Handbook
- Blank sheets of paper
- Pens

Ask

- How does an entrepreneur identify an opportunity?
- What do you think are the common queries or concerns faced by entrepreneurs?
- How can you identify new business opportunity?

Say

- Let's talk about opportunity, common queries or concerns faced by entrepreneurs, idea as an opportunity, factors to consider when looking for opportunities, ways to identify new business, and opportunity analysis as discussed in Participant Handbook.
- Let's do an activity to understand ways to identify business opportunities within your business.

Do

- Tell the class that this is an individual activity.
- Tell the participants to create a matrix on their notebooks.
- There will be four boxes in your matrix.
- Strength, Weakness, Opportunity and Threats will be the four headings of the matrix. This is called the SWOT matrix.
- Read out the questions to them and tell the participants they need to answer the questions asked in each matrix.
- Tell them they can also use their own understanding of themselves to fill the SWOT matrix.

Activity

Do your SWOT analysis

Strength What are your strengths? What unique capabilities do you possess? What do you do better than others? What do others perceive as your strengths?	**Weakness** What are your weaknesses? What do your competitors do better than you?
Opportunity What trends may positively impact you? What opportunities are available to you?	**Threat** Do you have solid financial support? What trends may negatively impact you?

Do

- Congratulate everyone for the class activity.
- Ask the audience to applaud for themselves.
- Allot the participants sufficient time to complete this activity, but do keep a check on time.
- Ask de-brief questions to cull out information from the participants.

Ask

De-brief questions:

- What are your weaknesses according to your SWOT analysis?
- Do you think you can change your weakness into strength? How?
- Do you think you can work on your threats? How?

Summarize

- Close the discussion by summarizing ways to identify business opportunities within your business.
- Ask the participants what they have learned from this exercise.
- Ask if they have any questions related to what they have talked about so far.

UNIT 12.5.6: Entrepreneurship Support Eco-System

Unit Objectives

At the end of this unit, participants will be able to:

- Explain the meaning of entrepreneur
- Describe the different types of entrepreneurs
- List the characteristics of entrepreneurs
- Recall entrepreneur success stories
- Discuss the entrepreneurial process
- Describe the entrepreneurship ecosystem
- Discuss the purpose of the 'Make in India' campaign
- Discuss the key schemes to promote entrepreneurs

Resources to be Used

- Participant Handbook
- Chart papers
- Marker pens
- Pencils
- Colour pencils
- Scale
- Eraser
- Other requisite stationery material

Ask

- Do you think that entrepreneurs need support?
- What do you think is an eco-system?
- What do you think 'entrepreneurship support eco-system' means?

Say

- Let's learn what entrepreneurship support eco-system means.
- Discuss 'Entrepreneurship Support Eco-System' as given in the Participant Handbook.

Ask

- Can you define entrepreneurship support eco-system?
- What are the key domains of the support eco-system?

Say

- Let's learn more about these domains by conducting an activity.
- You have to make a poster showing the components of the six main domains of entrepreneurship support eco-system.

Team Activity

- Making a poster showing the entrepreneurship support eco-system.

Do

- Divide the class into groups of four or six.
- Hand out chart paper and coloured pens.
- Explain the purpose and duration of the activity.
- Go around checking the progress of each group.
- Set guidelines pertaining to discipline and expected tasks.

Activity De-brief

Ask each group to display their poster and explain the key domains of entrepreneurship support eco-system.

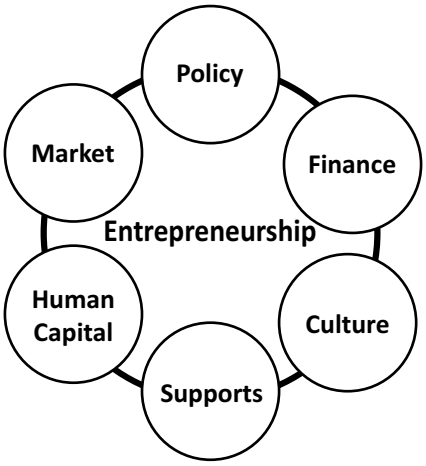

Ask

- What kind of government support eco-system is available for entrepreneurs in India?

Say

- Discuss 'Make in India' campaign as given in the Participant Handbook.

Team Activity

- Presentation on key schemes to promote entrepreneurs

Do

- Divide the class into pairs.
- Number each pair from 1-15.
- Assign a scheme, same as their group number, to each group.
- Ask them to read the scheme carefully and present it to the class.
- Explain the purpose and duration of the activity.
- Go around checking the progress of each group.
- Set guidelines pertaining to discipline and expected tasks.

Activity De-brief

- Ask each group to explain the scheme offered by government to promote entrepreneurs.

Summarize

- Summarize the unit by discussing the key points and answering questions the participants may have.

UNIT 12.5.7: Risk Appetite & Resilience

Unit Objectives

At the end of this unit, participants will be able to:

- Discuss the relationship between entrepreneurship and risk appetite
- Discuss the relationship between entrepreneurship and resilience
- Describe the characteristics of a resilient entrepreneur

Resources to be Used

- Participant Handbook
- Chart papers
- Blank sheets of paper
- Pens
- Marker pens

Ask

- Can you define risk or explain what constitutes a risk?
- What do you people mean when they say, "This may be a risky proposition"?
- What risks are they talking about?

Example

- Let's have a look at these two examples:

Rohit and his family were travelling by car from Delhi to Nainital. It was their second trip there. Rohit was familiar with the road. His friends told him that the highway after Rampur was in a bad condition. They advised him to take a shortcut and turn left from Moradabad and take the Kaladhungi road. This road is in a better condition.

Since he was going with his family, and did want take the risk of getting lost, he left early. He took the Kaladhungi road and reached Nainital well in time.

Suresh and his family too were travelling by car from Delhi to Nainital. It was their second trip there. His friends too advised him to take a shortcut and turn left from Moradabad and take the Kaladhungi road as this road was in a better condition.

Suresh too decided to take the Kaladhungi road but he left Delhi in the afternoon. It was dark by the time he reached Kaladhungi, and he was sure that he was taking the correct turn. As it was late, he could not find anyone to give him directions. He ended up being in an unknown place that was scarcely inhabited.

Say

- Let's see what type of risks Rohit and Suresh took.
- Discuss 'Risk Appetite and Resilience' with the participants as given in the Participant Handbook.

Say

- Let's learn more about risk appetite and resilience with the help of an activity.

Team Activity

Risk Appetite

- This is a group activity.

- In the previous unit, you read success stories of Mr Dhirubhai Ambani and Dr Karsanbhai Patel.
- Mr Ambani left his job and started his company Reliance with just Rs. 50,000/-.
- Dr Patel kept his job, went door-to-door to sell Nirma, and only when the brand started gaining popularity did he start his own company.
- What types of risk did both of them take?
- What risk factors, do you think, did they keep in mind before launching their company?
- Write the Risk Appetite Statement of both the companies.

Activity De-brief

- Who took a greater risk?
- What are the differences between the Risk Appetite Statement of both the companies?

Do

- Instruct the participants that this is group work.
- Divide the class into small groups of 4.
- Give each group a chart paper.
- Tell the participants that they have to evaluate the risks taken by Mr Dhirubhai Ambani and Dr Karsanbhai Patel.
- Give the participants 15 minutes to discuss and write.
- Keep a check on time. Tell the group to wind up quickly if they go beyond the given time limit.

Ask

- Do you think all entrepreneurial ventures are successful?
- What happens if the first venture is not successful?
- Should the entrepreneur stop when faced with challenges or face them?

Example

- Let's have a look at the following example:

Vijay Shekhar Sharma is the founder of Paytm, which is a giant Indian e-commerce. He was born in a middle-class family in Uttar Pradesh. He started his first job at an MNC. He quit after six months and built a company One97 with his friends. As One97 grew bigger, it needed more money because it was running more servers, bigger teams, and had to pay royalty. At that time, the tech bubble popped and technology companies were running in losses. Finally, money ran out. So One97 took loans and then more loans at higher rates of interest, as high as 24 per cent, and became caught in a vicious cycle.

In 2014, Paytm was launched with online wallet services after which, the company enabled online payment transactions. The company got licenses from RBI in 2016 to launch India's first ever payment bank. Moreover, the main motive of Paytm was to transform India into a cashless economy.

After demonetization came into effect, Vijay Shekhar Sharma started promoting online and digital transactions to deal with the cash crunch. In fact, the service of the company's mobile wallet is accepted across India. The logo of Paytm is now popular almost everywhere from tea stalls to major companies.

Say

- Let's see what qualities made Vijay Shekhar Sharma a resilient entrepreneur.
- Discuss Entrepreneurship and Resilience with the participants as given in the Participant Handbook.

Say

- Let's learn more about entrepreneurship and resilience with the help of an activity.

Team Activity

Entrepreneurship and Resilience

- This is a group activity.

- Think of some entrepreneurship ventures that faced challenging times, but later resulted in success stories.
- Who is the founder of that company?
- What challenging times did it face?
- How did it overcome those challenges?
- List the resilient characteristics of the entrepreneur.

Activity De-brief

- Each group to give their presentation.
- Why did you choose this company?
- What is the success story of the company?

Do

- Instruct the participants that this is group work.
- Divide the class into small groups of 4.
- Give each group a chart paper.
- Tell the participants that they have to think of an entrepreneur who faced challenging times, but eventually succeeded.
- Give the participants 15 minutes to discuss and write.
- Keep a check on time. Tell the group to wind up quickly if they go beyond the given time limit.

Summarize

- You can summarize the key points of the unit.
- Ask the participants what they learned from the activities.
- Clarify any questions or doubts they might have.

UNIT 12.5.8: Success and Failures

Unit Objectives

At the end of this unit, participants will be able to:

- Discuss how to deal with failure

Resources to be Used

- Participant Handbook

Ask

- Have you heard the quote 'nothing is impossible'?
- What do you think it means?
- Do you think that all successful entrepreneurs became famous overnight or did they have to struggle or face failure before succeeding?

Example

- Let's have a look at this example.

Shah Rukh Khan, also known as, SRK or King Khan is a force to reckon with. Did he achieve stardom overnight? Shah Rukh Khan, who has seen many struggles in his life – he has slept on streets, struggled to support himself and his sister at a very young age, and lost his parents very early in life, which led to his sister seeking mental health support. Amidst all the chaos and challenges, he kept pushing himself, and today he stands tall as the 'Badshah of Bollywood'. Certainly those years were not easy for him.

When he was young, he stood at Marine Drive and said, “I will rule this city one day”. Failure was not just his companion during or before his stardom, it is still a substantial part of his life. Success does not come easy. What made him a star was his acceptance of failure and the urge to improve.

Say

- How do you define success and failure?
- What is fear?
- Discuss “success and failure” with the participants as given in the Participant Handbook.

Ask

- Have you felt or experienced fear?
- What led you to feel that emotion?
- How did you handle it?

Say

- Let's learn the about success and failure with the help of an activity.

Team Activity

- Divide the class into groups of four.
- Instruct them to think of one scenario where they have to interview a successful entrepreneur.
- Explain the purpose and duration of the activity.
- Set guidelines pertaining to discipline and expected tasks.
- They have to choose one person from the group as the interviewee and one as the interviewer.
- Go around and make sure they have understood what is to be done and are discussing the roles properly.
- Check that everyone understands their role. Give clarifications if needed. Give the participants about 5 minutes to discuss and decide their roles.
- Ask the groups to stop the discussion as soon as the time is over.
- Invite each group one by one to come and present their interview as a role play.

Notes for Facilitation

Facilitating Role Plays

Preparing for the activity

1. Carefully review the details of the scenario and the character descriptions.
2. Become familiar with the key issues being addressed in the scenario.
3. Study the provided material so that you are ready to address issues related to the situations depicted in the role plays.
4. Anticipate potential questions that might be raised by the participants and be ready to address them.

Conducting the activity

1. Introduce the activity. Emphasize that role playing provides participants with an opportunity to apply their new knowledge, skills, and tools in situations that simulate actual interactions with customers.
2. Ask participants to form pairs. Direct the members of each group to choose who will play the roles. Remind the groups that each participant should be given the opportunity to play/practice the different roles.
3. Conduct a demonstration so that participants become familiar with the expectations related to the roles and support materials.
4. To maintain spontaneity of the interactions during the role play, ask the participants not to discuss the details of their roles prior to the role play.
5. Give the pairs 15-20 minutes to conduct the role play.
6. Circulate among the groups to answer any questions that may arise and provide guidance as needed.
7. After all the pairs have finished with the role play, conduct a de-briefing session on each role play.
8. Ask the groups to take five minutes to talk about what happened during the role play. The groups should discuss the questions given in the de-briefing for each role play. Encourage participants to provide constructive criticism during their discussions.
9. Conclude the activity by asking participants to think about whether and how they might use scripted role plays in their real life.

Summarize

- Wrap the unit up after summarizing the key points and answering questions.

Notes

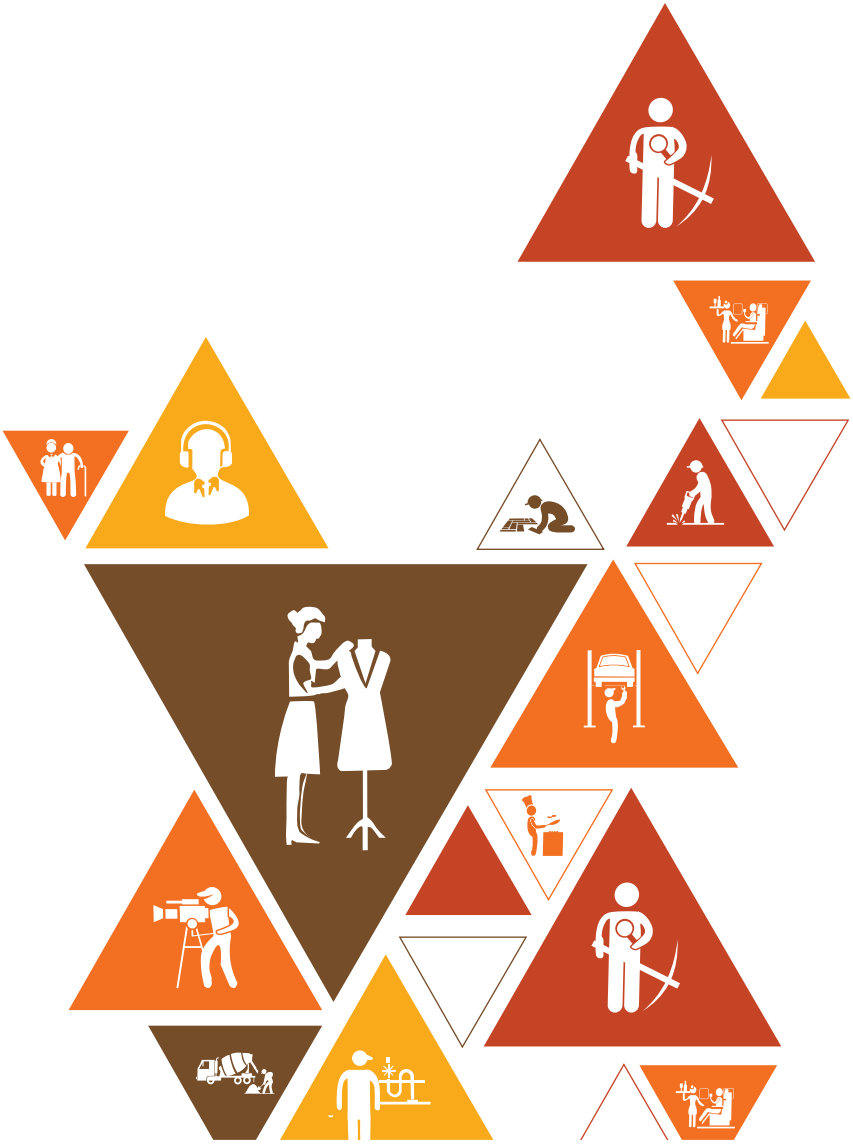

UNIT 12.6: Preparing to be an Entrepreneur

Key Learning Outcomes

At the end of this unit, participants will be able to:

1. Discuss how market research is carried out
2. Describe the 4 Ps of marketing
3. Discuss the importance of idea generation
4. Recall basic business terminology
5. Discuss the need for CRM
6. Discuss the benefits of CRM
7. Discuss the need for networking
8. Discuss the benefits of networking
9. Discuss the importance of setting goals
10. Differentiate between short-term, medium-term and long-term goals
11. Discuss how to write a business plan
12. Explain the financial planning process
13. Discuss ways to manage your risk
14. Describe the procedure and formalities for applying for bank finance
15. Discuss how to manage their own enterprise
16. List the important questions that every entrepreneur should ask before starting an enterprise

UNIT 12.6.1: Market Study/ The 4Ps of Marketing/ Importance of an IDEA: Understanding Market Research

Unit Objectives

At the end of this unit, participants will be able to:

- Discuss how market research is carried out
- Describe the 4 Ps of marketing
- Discuss the importance of idea generation

Resources to be Used

- Participant Handbook
- Chart papers
- Markers pens
- Blank sheets of paper

Ask

- Suppose, you want to open a restaurant, what are the factors you will consider?
- How will you promote your restaurant?

Example

- Let's have a look at this example.

  Arjun was an MBA working in a company. But he wanted to start a low cost budget hostel for foreign tourists coming to India. He did a lot or market research before starting the project. Based on the information he gathered, he made his business plan. His hostel is now flourishing and he is thinking of expanding to other tourist destinations.

Say

- Discuss "Market Study" with the participants. Refer to the Participant Handbook.
- Let's learn about market study and research with the help of an activity.

Team Activity

Market Study

- This is a group activity.
- You want to start your own tuition centre.
- What type of research will you do?

Activity De-brief

- Ask each group to come forward and give a brief presentation.
- Encourage other groups to be interactive and ask questions.
- What factors did you keep in mind while doing your research?
- Based on our research would you go ahead and open a tuition centre?

Do

- Instruct the participants that this is group work.
- Divide the class into small groups of 4 or 6.
- Give each group a chart paper.
- Tell the participants that they have to start their own tuition centre.
- Give the participants 10 minutes to discuss and write the research work they need to do.
- Keep a check on time. Tell the group to wind up quickly if they go beyond the given time limit.

Say

- By opening a tuition centre you are offering a service.

Ask

- What factors will you keep in mind before opening it?

Say

- Discuss "The 4Ps of Marketing" with the participants as given in the Participant Handbook.

Say

- Let's learn about the 4Ps of Marketing with the help of an activity.

Team Activity

4 Ps of Marketing

- This is a group activity.
- You have to sell a pen to four different segments:
  1. Rural villagers
  2. Rural middle class
  3. Urban middle class
  4. Upper end rich people (Niche market)

Keeping the 4Ps of Marketing in mind, what marketing strategy will you design to sell the pen?

Activity De-brief

- Ask each group to to present their strategy.
- Encourage other groups to be interactive and ask questions.

Do

- Instruct the participants that this is group work.
- Divide the class into four groups.
- Give each group a chart paper.
- Assign each group a target audience for selling the pens:
  1. Rural villagers
  2. Rural middle class
  3. Urban middle class

4. Upper end rich people

- Tell the participants that they have to design a marketing strategy keeping the 4Ps of Marketing in mind.
- Give the participants 20 minutes to discuss and come up with their strategy.
- Keep a check on time. Tell the group to wind up quickly if they go beyond the given time limit

Activity De-brief

- Ask each group to come forward and give a brief presentation.
- Ask each group what they kept in mind while designing their marketing strategy.
- Encourage other groups to be interactive and ask questions.

Say

- Each entrepreneur has an idea of wants he wants to sell. It may be a service or a product.
- Discuss "Importance of an IDEA" as given in the Participant Handbook.

Summarize

- Summarize the key points of the unit.
- Ask the participants what they learnt from the activities.
- Encourage them to ask if they have any doubts.

UNIT 12.6.2: Business Entity Concepts

Unit Objectives

At the end of this unit, participants will be able to:

- Recall basic business terminology

Resources to be Used

- Participant Handbook

Say

- Let's recall some basic business terminology.
- Discuss the Business Entity Concepts as given in the Participant Handbook.
- Let's learn some basic business terminology by having an activity.
- We will have a quiz today.

Activity

- The activity is a quiz.

Do

- Divide the class in two groups and give a name to each group.
- Explain the rules of the quiz. For each correct answer the group gets 1 mark.
- If the group is unable to answer the question is passed to the next group.
- Explain the purpose and duration of the activity.
- Ask the questions of the quiz.
- Keep a score of the groups.
- Set guidelines pertaining to discipline and expected tasks.

Summarize

- Summarize the unit by discussing the key points.

Notes for Facilitation

QUESTIONS FOR THE QUIZ

1. What does B2B mean?

   Business to business

2. What is a financial report?

   A comprehensive account of a business' transactions and expenses

3. Who is a sales prospect?

   A potential customer

4. How is working capital calculated?

   Current assets minus current liabilities

5. What is an estimation of the overall worth of a business called?

   Valuation

6. You are buying a house. What type of transaction is it?

   Complex transaction

7. How will you calculate the net income?

   Revenue minus expenses

8. How is Return on Investment expressed?

   As percentage

9. How will you calculate the cost of goods sold?

   Cost of materials minus cost of outputs

10. What is revenue?

    Total amount of income before expenses are subtracted.

11. What is a Break-Even Point?

    This is the point at which the company will not make a profit or a loss. The total cost and total revenues are equal.

12. What is the formula used to calculate simple interest?

    *A = P(1 + rt); R = r * 100*

13. What are the three types of business transactions?

    Simple, Complex and Ongoing Transactions

14. The degrading value of an asset over time is known as .

    Depreciation

15. What are the two main types of capital?

    Debt and Equity

UNIT 12.6.3: CRM & Networking

Unit Objectives

At the end of this unit, participants will be able to:

- Discuss the need for CRM
- Discuss the benefits of CRM
- Discuss the need for networking
- Discuss the benefits of networking

Resources to be Used

- Participant Handbook

Ask

- Can your business run without customers/buyers?
- Who is the most important entity in any business?

Say

- The key to every success business lies on understanding the customer's expectations and providing excellent customer service.
- Discuss about CRM and its benefits. Refer to the Participant Handbook.
- Providing excellent customer service entails:
  - Treating your customers with respect.
  - Be available as per their need/ schedule.
  - Handling complaints effectively.
  - Building long lasting relationships.
  - Collecting regular feedback.
- Handle customer complaints proactively. Ask “what happened”, “why it happened”, “how can it be avoided next time”, etc.
- Collecting feedback from the customers regularly will enable you to improve your good/service.
- “Let's understand it better with the help of some case scenarios. You will be given some cases within your groups. You have to analyse the case scenario that has been given to you and then find an appropriate solution to the problem.”

Do

- Divide the class into four groups of maximum six participants depending on the batch size.
- Give one case study to each group.
- Instruct them to read the case carefully.
- The group is expected to analyse and discuss the case amongst them and find a solution to the given problem.
- Put down the discussion points (de-brief questions) on the board. Give the class 5-10 minutes to discuss the case and note down their solutions.
- At the end of 10 minutes, the team should present their case solution to the class.

Team Activity

Case Study Analysis

Raju runs a business of wooden furniture. He has a huge list of customers on Facebook and WhatsApp who give him orders regularly. Ankita is one of his old and regular customers. She placed an order for a new chester and TV cabinet via WhatsApp and requested Raju to send them as soon as possible. When the parcel reached Ankita through courier she found that chester was broken and the TV unit was chipped from the bottom. Ankita was heartbroken. It was a complete waste of money. She sent a message to Raju on WhatsApp, expressing her anger and disappointment. Raju might lose an old customer forever if he doesn't satisfy the customer. What should Raju do to retain his customer?

Scenario 2

Rajni runs a boutique shop. She sells suits and sarees. She is one of the most successful designer in her city. Rajni swears that all the clothes in her boutique have unique designs. Smita has to attend her cousin's wedding; she goes to Rajni's boutique to buy a saree. Smita wanted a unique designer saree. Rajni customized a saree for her and sent it over the courier. When Smita had a look at the saree she realised her two friends had the same design sarees. She sent a message to Rajni on WhatsApp, expressing her anger and disappointment. Did Rajni make a false promise? Were her designs copied? What could happen to Rajni's image after this incident? What would you do if you were in Rajni's place?

Scenario 3

Shama is a beautician who offers parlour services to ladies by making home visits. Recently, Shama got her name registered on an e- commerce website. Two days earlier, she got a message from Mrs Sushma. The appointment was fixed for next day, 11:00 am and the remuneration for the services was decided beforehand. When Shama reached there at 10:50 am, Mrs Sushma was not at home. When Shama called her, she asked her to wait for a while. Mrs Sushma reached home at 11:45 am. Meanwhile, Shama had to reschedule her next appointment. After availing Shama's services, Mrs Sushma refused to pay the requisite amount and started finding faults in the services provided by her. Who was at fault in this scenario? What should you do in case the customer behaves unreasonably? What would you do if you were in Shama's place?

Scenario 4

Shailender is the manager of a car showroom. He proactively takes part in all the transactions that happen in his showroom. Vinita wants to buy a new car. She has chosen a car from Shailender's showroom. The salesperson has given her a very good discount and has also promised free service for one year. Vinita goes to the showroom and asks to complete all the formalities to purchase the car. When she sees the final bill she realize that she has not received the promised discount neither was there any mention of the free services. She immediately demands to see the Shailender. When Shailender's head asks how much discount Vinita was promised, he realised the discount will make the sale in loss. The car showroom owner might lose a customer and deal due to false commitments made by his manager. Besides, the customer might tell this to other people, creating a bad name and image for the showroom. If you owned that showroom, how would you have convinced your customer?

Say

- Now, let's discuss the problem and solution with the class.
- The group will first briefly describe the case to the class.
- Then discuss the issue identified and the proposed solution.
- Present the solution as a role play.
- Post presentation, the other groups may ask questions from the group that has presented.

Do

- Congratulate each group for the presentation/ role play.
- Ask the audience to applaud for them.
- Keep a check on time. Tell the group to wind up the discussion quickly if they go beyond the given time limit.

Say

- If your customers are happy with you they will give referrals which will help to grow your business.
- One more way of growing business is 'Networking'.
- Discuss Networking and its benefits. Refer to the Participant Handbook.

Activity

Group Discussion

- Conduct a group discussion in the class on how they can do networking for their business.

Summarize

- Ask the participants what they have learnt from this exercise/ activity.
- Ask if they have any questions related to what they have talked about so far.
- Close the discussion by summarizing the importance of CRM and Networking for entrepreneurs.
- Close the discussion by summarizing the importance of CRM and Networking for entrepreneurs.

UNIT 12.6.4: Business Plan: Why Set Goals?

Unit Objectives

At the end of this unit, participants will be able to:

- Discuss the importance of setting goals
- Differentiate between short-term, medium-term and long-term goals
- Discuss how to write a business plan
- Explain the financial planning process
- Discuss ways to manage your risk

Resources to be Used

- Participant Handbook
- Chart papers
- Blank papers
- Marker pens
- Ruler

Ask

- Remember we had written SMART Goals in a previous session? Let's try and recall why it is important to set goals?
- While framing SMART goals, we talked about 'T' in SMART, which was 'Time Bound'? What do we mean by time bound goals?
- What time limit did you set for your goal- 3 weeks, 3 years, 10 years?

Say

- Talk about short term, long term and medium term goals, as discussed in the Participant Handbook.

Ask

- As you are planning to become an entrepreneur, you must have thought of an idea for a start-up. What is your business idea?

Do

- Ask few participants to share their business ideas.

Ask

- Have you created a business plan for your business idea?
- Do you think it is important to have a business plan in place? Why/ why not?

Say

- Talk about 'Why Create a Business Plan' as discussed in the Participant Handbook.
- Let's understand it better with the help of an activity.

Team Activity

Writing a business Plan

- This is a group activity.
- Give the groups the required resources such as chart paper and markers.
- This activity is divided into two parts:
  1. Create a business idea
  2. Develop a business plan
- The group will discuss and come up with a new business idea and present their idea to the class.
- In the second part of the activity the group will develop a business plan for the business idea.
- The business plan prepared will be presented by the groups to the class.

MY BUSINESS PLAN
Executive Summary: What is your Mission Statement?
Business Description: What is the nature of your business?
Market Analysis: What is your target market?
Organization and Management: What is your company's organizational structure?
Service or Product Line: What is the lifecycle of your product/ service?
Marketing and Sales: How will you advertise and sell your products?
Funding Request: How much fund is required and from where?

Say

- Teams will need to brainstorm for this part of the activity.
- Use the blank papers for the second part of this activity
- Make your business plan on a chart paper based on the following parameters:
  1. Executive Summary
  2. Business Description
  3. Market Analysis
  4. Organization and Management
  5. Service or Product Line
  6. Marketing and Sales
- Explain each parameter in detail as done in the Participant Handbook.
- Discuss each parameter with the business idea examples of the groups.
- Groups will discuss and develop the business plan for their business idea.

Say

- Now, let's share our plan with the class.
- Each group will briefly describe the plan to the class.
- Post presentation, the other groups may ask questions to the group who have presented their plan.

Do

- Congratulate each group for sharing their points.
- Ask the audience to applaud for them.
- Keep a check on time. Tell group to wind up the discussion quickly if they go beyond the given time limit.

Say

- Along with a business plan, you need to create a financial plan and evaluate the risk involved with your start up.
- Discuss 'Financial Planning' and 'Risk Management' in detail as given in the Participant Handbook.

Summarize

- Ask the participants what they have learnt from this exercise/ activity.
- Ask if they have any questions related to what they have talked about so far.

Notes for Facilitation

- Keep the business plan format ready in a flipchart to display it during the activity.

UNIT 12.6.5: Procedures and Formalities for Bank Finance

Unit Objectives

At the end of this unit, participants will be able to:

- Describe the procedure and formalities for applying for bank finance

Resources to be Used

- Participant Handbook
- Bank loan/finance form sample

Ask

- While preparing a business plan in the last session, we discussed financial planning to arrange financial resources for your start-up. Therefore, how will you collect funds to start your business?

Say

- While most entrepreneurs think 'product' is the most difficult thing to decide for a business, start-up capital poses an even a bigger obstacle. Though there are various ways of funding the business, to convince investors to invest money is the most challenging.
- Some of the funding options available in India are:
  - **Bootstrapping**: Also called self-financing is the easiest way of financing
  - **Crowd funding**: Funds are collected by consumers pre-ordering or donating for starting the business.
  - **Angel investors**: Individual or group of investors investing in the company
  - **Venture capitalists**: Venture capitals are professionally managed funds who invest in companies that have huge potential. They usually invest in a business against equity.
  - **Bank loans**: The most popular method in India.
  - **Microfinance Providers or NBFCs**
  - **Government programmes**
- Let us know discuss the most popular method i.e. bank finance in detail here.

Do

- Discuss the list of documents that are required to apply for a loan like letter of introduction, business brochure, references of other banks, and financial statements.
- Explain the details to be filled in a loan application form.
- Divide the class into groups. Give each group a loan application form.
- Ask the groups to discuss and fill the form.

Summarize

- Close the discussion by summarizing the important documents needed for bank loan.
- Ask the participants if they have any questions related to what they have talked about so far.

Notes for Facilitation

- Checklist of documents is provided as resources for the session.
- You can make some copies and distribute it during the group activity.
- Download sample loan application forms from any nationalised bank's website. Print sufficient copies to circulate it amongst the groups.

CHECKLIST OF DOCUMENTS TO BE SUBMITTED ALONG WITH LOAN APPLICATION (Common for all banks)
1. Audited financial statements of the business concern for the last three years
2. Provisional financial statements for the half – year ended on _____
3. Audited financial statements of associate concern/s for the last three years
4. Copy of QIS II for the previous quarter ended on _____
5. Operational details in Annexure I
6. CMA data for the last three years, estimates for current year and projection for the next year
7. Term loan/DPG requirements in Annexure II
8. List of machinery in respect of machinery offered as security in Annexure III
9. Additional details for export advances furnished in Annexure IV
10. Property statements of all directors/partners/proprietor/guarantors
11. Copies of ITAO of the company for the last three years
12. Copies of ITAOs/WTAOs of the directors/partners/proprietor and guarantors
12. Copies of certificate from banks and financial institutions certifying the latest liability with them
14. Copy of board resolution authorizing the company to apply to your bank for the credit facilities mentioned in application
15. Copy of memorandum and article of association (in case of limited company)/partnership deed (in case of partnership firm)
16. Cash budget for the current year and next year in case of contractors and seasonal industries

UNIT 12.6.6: Enterprise Management – An Overview: How to Manage Your Enterprise?

Unit Objectives

At the end of this unit, participants will be able to:

- Discuss how to manage their own enterprise

Resources to be Used

- Participant Handbook

Ask

- Having set-up a business, do you think it is possible to do everything on your own?
- Does one require trained persons for help?
- What does management mean?

Say

- Let's have a look at this example:

  Kapil had a small business that was beginning to pick up pace. He wanted to expand his business, and therefore employed few more people. One day, as he was walking past Ramesh, one of his new employees, he overheard Ramesh talking rudely to a customer on the phone. This set him thinking. Kapil realised that he should have regular team meetings to motivate his employees and speak with them about any problems they might be facing during work. He should also conduct training sessions on new practices, soft skills, and technology, and develop work ethics manual for managing his enterprise.

Say

- Was Kapil correct in his approach or he should have scolded Ramesh instantly in front of his other employees?
- Discuss "Enterprise Management – An Overview" with the participants as given in the Participant Handbook.

Say

- Let's learn how to effectively manage an enterprise or business through an activity.

Team Activity

Enterprise Management

- This is a group activity.
- Design a matrix listing the topics and key words that are needed to run an enterprise effectively and smoothly.

Activity De-brief

- Have each group present their matrix.
- Encourage participants of the other groups to ask question about each other's presentation.

Do

- Instruct the participants that this is group work.
- Divide the class into small groups of 4.
- Give each group a chart paper and coloured pen.
- Tell the participants that they have make a matrix they need to fill.
- They have to write the main topics and key words that will them effectively manage their enterprise.
- Give the participants 15 minutes to discuss and write.
- Keep a check on time. Tell the group to wind up quickly if they go beyond the given time limit.

Summarize

- Ask the participants what they have learned from this exercise/activity.
- Ask if they have any questions related to what they have talked about so far.
- Close the discussion by summarizing the importance of effective management to run an enterprise as given in the Participant Handbook.

UNIT 12.6.7: 20 Questions to Ask Yourself before Considering Entrepreneurship

Unit Objectives

At the end of this unit, participants will be able to:

- List the important questions that every entrepreneur should ask before starting an enterprise

Resources to be Used

- Participant Handbook
- Blank sheets of paper
- Pens

Ask

- Why do you want to become an entrepreneur?

Say

- It is very important to know why you want to become an entrepreneur. Your personal goals for becoming an entrepreneur play a key role in the success of your business. Your goals should be clear well before you start your business.
- Apart from the goals, the other aspects of business that you need to bear in mind are the potential problems that you may face to set-up, your areas of interest, and all the other dimensions of the business.
- Let's understand it better with the help of some questions that every entrepreneur should ask before starting their own business.
- Open the Participant Handbook section named '20 Questions to Ask Yourself Before Considering Entrepreneurship'. You have to answer the questions individually.
- Then, we will have a class discussion on all the questions.

Do

- Read out the questions one by one in front of all the participants.
- Participants have to answer all the one by one questions.
- Give the class 10-15 minutes to note down their answers.
- At the end of 15 minutes, open the discussion for all the questions.
- Moderate the discussion by focusing on the relevant points.
- Keep a check on time and don't let the discussion get sabotaged or lose track of time. Ensure all the questions are covered and discussed.

Summarize

- Ask the participants what they have learned from this exercise/activity.
- Ask if they have any questions related to what they have talked about so far.

Notes

Skill India
कौशल भारत-कुशल भारत

सत्यमेव जयते
GOVERNMENT OF INDIA
MINISTRY OF SKILL DEVELOPMENT
& ENTREPRENEURSHIP

N·S·D·C
National
Skill Development
Corporation
Transforming the skill landscape

INDIAN IRON & STEEL SECTOR SKILL COUNCIL

13. Annexures

Annexure I: Training Delivery Plan

Annexure II: Assessment Criteria

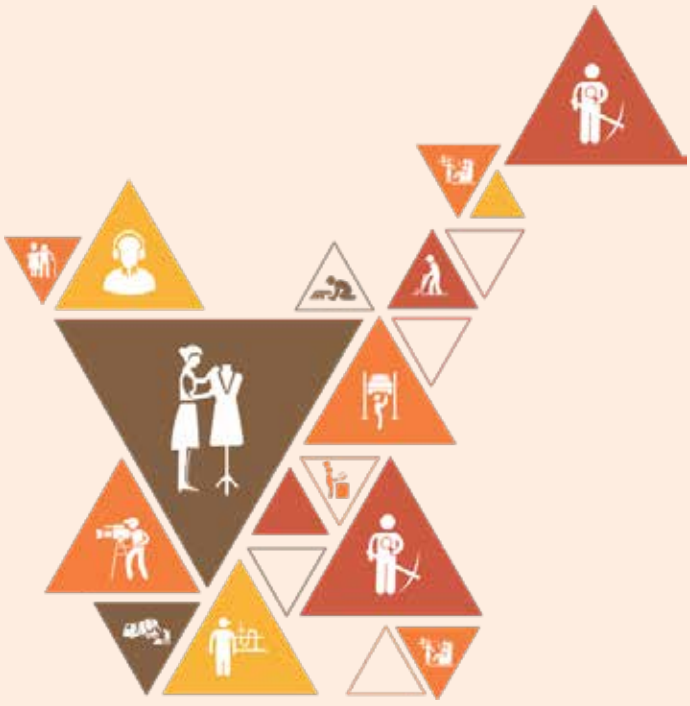

Annexure I

Training Delivery Plan

Training Delivery Plan			
Program Name:	Certificate Course in Tungsten Inert Gas Welder (GTAW)		
Qualification Pack Name & Ref. ID	Tungsten Inert Gas Welder (GTAW) - ISC/Q0911		
Version No.	1.0	**Version Update Date**	30-12-2015
Pre-requisites to Training (if any)	Minimum qualification – 10th Pass / ITI Pass		
Training Outcomes	**By the end of this program, the participants will be able to:** 1. Perform Tungsten Inert Gas Welding (TIG) 2. Manually Cut Metal and metal alloys 3. Use basic health and safety practices at the workplace 4. Works effectively with others		

Sl. No	Module Name	Session Name	Session Objectives	NOS Reference	Methodology	Training Tools/ Aids	Duration
1	Over view of Iron & Steel Industry	Icebreaker	• Introduce each other • Build rapport with fellow students and the facilitator		Group Activity: Passing the Parcel	Available objects such as a book, pen, duster etc.	0.5 hours
2	Over view of Iron & Steel Industry	Overview of steel industry and steel industries in India	• Understanding Iron & steel industry • Understanding types of Iron & Steel Industry • Understanding products of Iron & Steel industry • Activities in Iron & Steel Industry	NA	Facilitator-led-discussion Videos	PPTs of Iron and steel manufacturing, Charts showing the same	3.5 hrs
3	5S & House keeping	5S safety system, waste management and housekeeping practices	• Identification of bottlenecks in functioning of work place • Various methods of housekeeping both pre-work & post-work as well	ISC/N0008 PC10. PC11, PC12	• Facilitator-led-discussion • Skill Practice (Activity)	PPTs of 5S, Display Charts of 5S, Audit Checklists of 5S	14 hrs

4	Perform Tungsten Inert Gas (TIG) Welding also known as Gas tungsten Inert Gas Welding (GTAW)	TIG welding, TIG welding equipment and tools requirement, TIG welding parameters	• Working with safety at all times • Welding drawings and symbols • Preparing welding operations • Identifying welding tools and equipment	ISC/N0911 PC1. PC2, PC3, PC4, PC5, PC6, PC7, PC8, PC9, PC10, PC12, PC13, PC14, PC15, PC16, PC17, PC18, PC19, PC20, PC21 KB 1, KB2, KB3, KB4, KB5, KB6, KB7, KB8, KB9, KB10, KB11, KB12, KB13, KB14, KB15, KB16, KB17, KB18, KB19, KB20, KB21, KB22, KB23, KB24, KB25, KB26, KB27, KB28, KB29, KB30	• Facilitator-led-discussion • Skill Practice (Activity	Engineering, fabrication drawings, work instructions, Hand tools for welding, measuring instruments &precision measuring instruments. TIG Welding machines with accessories	60 hrs
5	Perform Tungsten Inert Gas (TIG) Welding also known as Gas tungsten Inert Gas Welding (GTAW)	Weld positions and weld types, TIG welding operation, Testing and post welding activities	• Carrying out welding operations • Testing of quality • Post welding techniques • Dealing with contingencies	ISC/N0911 PC22. PC23, PC24, PC25, PC26, PC27, PC28, PC29, PC30, PC31, PC32, PC33, PC34, PC35, PC36, PC37, PC38, PC39 KB31, KB32, KB33, KB34, KB35, KB36, KB37, KB38, KB39, KB30, KB41, KB42,	• Facilitator-led-discussion • Skill Practice (Activity	Engineering, fabrication drawings, work instructions, Hand tools for welding, measuring instruments &precision measuring instruments. TIG Welding machines with accessories	96 hrs

6	Manually Cut Metal and metal alloys	Oxy fuel gas cutting, gas cutting tools and equipment, gas cutting parameters	• Working with safety at all times • Preparing cutting operations • Identifying welding tools and equipment	ISC/Q0910 PC1. PC2, PC3, PC4, PC5, PC6, PC7, PC8, PC9, PC10, PC12, PC13, PC14, PC15, PC16, PC17, PC18, PC19, PC20 KB1, KB2, KB3, KB4, KB5, KB6, KB7, KB8, KB9, KB10, KB11, KB12, KB13, KB14, KB15, KB16, KB17, KB18	• Facilitator-led-discussion • Skill Practice (Activity)	PPTs of Oxy-Gas cutting, attachments such as Electrode, Gases, Tips, Cups, Air plasma, Oxygen injected, Duel gas, various hand tools and display of same calibration tools & precession measuring instruments	24 hrs
7	Manually Cut Metal and metal alloys	Cutting positions, gas cutting operation, Testing and post cutting activities	• Carrying out cutting operations • Testing of quality • Post cutting techniques • Dealing with contingencies	ISC/Q0910 PC21. PC22, PC23, PC24, PC25, PC26, PC27, PC28, PC29, PC30, PC31, PC32, PC33, PC34, PC35, PC36 KB19, KB20, KB21, KB22, KB23, KB24, KB25, KB26, KB27, KB28, KB29, KB30, KB31	• Facilitator-led-discussion • Skill Practice (Activity)	PPTs of Oxy-Gas cutting, attachments such as Electrode, Gases, Tips, Cups, Air plasma, Oxygen injected, Duel gas, various hand tools and display of same calibration tools & precession measuring instruments	
8	Use basic health and safety practices at the workplace	Hazards at the site, control measures, PPE, safe working at heights and confined spaces, safe working practices	• Understanding the Occupational health & Safety • Understand What is hazard • Working at Heights, confined spaces	ISC/N0008 PC1. PC2, PC3, PC4, PC5, PC6, PC7, PC8, PC9. PC10, PC12. PC13 KB3, KB4, KB5, KB6, KB7, KB8, KB9, KB10, KB11, KB12, KB13	• Facilitator-led-discussion • Skill Practice (Activity)	PPTs for OHAS related to Job Role, Display Material for PPEs related to Job Role, Safety Material	60 hrs

9	Use basic health and safety practices at the workplace	Problem escalation, escalation matrix, accident reporting	• Documentation for Health and safety • Problem escalation	ISC/N0008 PC25. PC26 KB21, KB22	• Facilitator-led-discussion • Skill Practice (Activity)	PPTs for OHAS related to Job Role, Display Material for PPEs related to Job Role, Safety Material	2 hours
10	Use basic health and safety practices at the workplace	Fire safety, use of fire extinguisher, fire drill, emergency rescue and first aid techniques	• Health and safety procedures • Fire safety procedures • Emergencies, rescue and first aid procedures	ISC/N0008 PC13. PC14, PC15, PC16, PC17, PC18, PC19, PC20, PC21, PC22, PC23, PC24, KB14, KB15, KB16, KB17, KB18, KB19, KB20	• Facilitator-led-discussion • Skill Practice (Activity)	PPE, Different Type of Safety Sign, First Aid Box, Safety instrument and clothing, Step Ladder, Sample Accident reports, Fire Extinguishers, Items required for fire extinguisher and fire Safety	12 hrs
11	Work effectively with others	Effective communication, team work, workplace etiquettes	• Ensure appropriate communication with superiors, peers and others as applicable at work place • Demonstrate appropriate behaviour and etiquette at work place	ISC/N0009 PC1. PC2, PC3, PC4, PC5, PC6, PC7, PC8, PC9. PC10, KA1, KA2, KA3, KA4	• Facilitator-led-discussion • Skill Practice (Activity)	Communication skills PPTs, Posters Team management posters	16 hrs

Annexure II

Assessment Criteria

CRITERIA FOR ASSESSMENT OF TRAINEES

Assessment Criteria for Assistant Beauty Therapist	
Job Role	**Iron & Steel-Tungsten Inert Gas Welding (GTAW)**
Qualification Pack	**ISC/Q0911**
Sector Skill Council	**Indian Iron & Steel Sector Skill Council**

Sr. No.	Guidelines for Assessment
1	Criteria for assessment for each Qualification Pack will be created by the Sector Skill Council. Each Performance Criteria (PC) will be assigned marks proportional to its importance in NOS. SSC will also lay down proportion of marks for Theory and Skills Practical for each PC.
2	The assessment for the theory part will be based on knowledge bank of questions created by the SSC
3	Individual assessment agencies will create unique question papers for theory part for each candidate at each examination/training centre (as per assessment criteria below)
4	Individual assessment agencies will create unique evaluations for skill practical for every student at each examination/training centre based on these criteria.
5	To pass the Qualification Pack , every trainee should score a minimum of 60% in every NOS.
6	In case of successfully passing only certain number of NOS's, the trainee is eligible to take subsequent assessment on the balance NOS's to pass the Qualification Pack.

				Marks Allocated	
Assessment outcome (NOS Code and Description)	**Assessment criteria (PC)**	**Total Marks**	**Out Of**	**Theory**	**Skills Practical**
1. ISC/N0911: Perform Tungsten Inert Gas (TIG)	PC1. Work safely at all times, complying with health and safety legislation, regulations and other relevant guidelines	**450**	6	2	4
	PC2. Take necessary safety precautions for TIG welding operations		6	2	4

Welding also known as Gas Tungsten Arc Welding (GTAW) Welding	PC3. Adhere to procedures and system in place for health and safety, PPER and other regulations		6	2	4
	PC4. Check all connections of machines, welding leads, gas connection arrangement, electrode holder		7	2	5
	PC5. Interpret weld procedure data sheets specifications		15	5	10
	PC6. Select welding machines e.g. inverters, rectifiers and generators, according to the materials and task		10	5	5
	PC7. Select proper welding torch and electrode(W) that meet the job requirement and specification, select tungsten electrode by the colour of the tip according to base metal, and correct diameter		15	5	10
	PC8. Obtain filler wire according to specifications		7	2	5
	PC9. Prepare for the TIG welding process		5	0	5
	PC10. Prepare the materials and joint in readiness for welding		7	2	5
	PC11. Select and fit the welding shielding gases for a range of given applications including back purging		10	5	5
	PC12. Plan the welding activities before they start them effectively and efficiently for achieving specifications as per WPS		7	2	5
	PC13. Connect torches and components		5	0	5
	PC14. Connect and adjust regulators and flow meters to cylinders		5	0	5
	PC15. Read, set and adjust current (amperage) as required		15	5	10
	PC16. Set pre-purge with shielding gas as required		15	5	10
	PC17. Prepare tungsten by sharpening or balling it to desired tip shape		5	0	5

	PC18. Set and verify gas flow rates		15	5	10
	PC19. Prepare and support the joint, using the appropriate methods		15	5	10
	PC20. Tack weld the joint at appropriate intervals, and check the joint for accuracy before final welding, wherever required		15	5	10
	PC21. Match feed and travel speed as required		15	5	10
	PC22. Perform TIG welding operations to meet welding procedure specification requirements		15	5	10
	PC23. Use correct technique for starting the arc (using HF (high frequency) unit, scratching the electrode on the job material, lifting the electrode immediately after touching the job		15	5	10
	PC24. Use correct angle of torch and filler wire, direction of weld and inclusion defect		15	5	10
	PC25. Weld the joint to the specified quality, dimensions and profile		15	5	10
	PC26. Use manual welding and related equipment, to carry out TIG welding processes		15	5	10
	PC27. Use welding consumables appropriate to the material and application, to include AC current types and DC current types		15	5	10
	PC28. Produce joints of the required quality and of specified dimensional accuracy which achieve a weld quality equivalent to Level B of ISO 5817		15	5	10
	PC29. produce joints from various materials in different forms		15	5	10
	PC30. Use appropriate methods and equipment to check the quality, and that all dimensional and geometrical aspects of the weld are to the specification		15	5	10

	PC31. Check that the welded joint conforms to the specification, by checking various quality parameters using visual inspection		15	5	10
	PC32. Identify various weld defects		7	2	5
	PC33. Detect surface imperfections and deal with them appropriately		7	2	5
	PC34. Carry out DPT tests to assess fine defect open to the surface not detected by visual inspection (VT)		15	5	10
	PC35. Prepare for non-destructive testing of the welds for a range of tests		15	5	10
	PC36. Prepare for destructive tests on weld specimens for select tests		15	5	10
	PC37. Shut down and make safe the welding equipment and gases on completion of the welding activities, clean the area & store the accessories in designated place		15	5	10
	PC38. Detect equipment malfunctions and deal with them appropriately		15	5	10
	PC39. Deal promptly and effectively with problems within their control, and seek help and guidance from the relevant people if they have problems that they cannot resolve		5	0	5
	NOS Total	**Total**	**450**	**143**	**307**
2. **ISC/N0910: Manually cut metal and metal alloys using oxy-fuel gases**	PC1. Work safely at all times, complying with health and safety legislation, regulations and other relevant guidelines	**300**	10	5	5
	PC2. Take necessary safety precautions for gas cutting operations including equipment, processes and checks		10	5	5
	PC3. Interpret cutting procedure data sheets specifications		10	5	5

	PC4. Check regulators, hoses and check that valves are securely connected and free from leaks and damage		5	0	5
	PC5. Check equipment is calibrated and approved for use		5	0	5
	PC6. Check/fit the correct gas nozzle to the torch		5	0	5
	PC7. Ensure preheat and oxygen holes on the tips are clean		10	5	5
	PC8. Check that a flashback arrestor is fitted		15	5	10
	PC9. Set appropriate gas pressures		5	0	5
	PC10. Use the correct procedure for lighting, adjusting and extinguishing the flame		5	0	5
	PC11. Adjust torch valve for type of flame such as neutral, carburizing and oxidizing		5	0	5
	PC12. Follow sequence of operations such as pre-heating material and initiating cut		10	5	5
	PC13. Mark out the locations for cutting accurately and as per requirement		5	0	5
	PC14. Use appropriate and safe procedures for handling and storing of gas cylinders.		5	0	5
	PC15. Prepare the work area for the cutting activities		5	0	5
	PC16. Obtain the appropriate tools and equipment for the oxy-fuel gas cutting operations, and check that they are in a safe and usable condition		10	5	5
	PC17. Check that the oxy-fuel gas cutting equipment is set up for the operations to be performed		5	0	5
	PC18. Adjust cylinder valves and adjust regulator for operating pressure to achieve specifications for required operations		10	0	10

	PC19. Where appropriate, mark out the components for the required operations, using appropriate tools and techniques		10	0	10
	PC20. Perform trial cut to check for cut defects		5	0	5
	PC21. Operate the oxy-fuel gas cutting equipment to produce items/ cut shapes to the dimensions and profiles specified into various forms		10	5	5
	PC22. Use various types of oxy-fuel gas cutting methods		10	5	5
	PC23. Perform various cutting operations correctly		5	0	5
	PC24. Produce thermal cuts in various forms of material (metal of 3mm and above)		5	0	5
	PC25. Produce cut profiles for various type of materials		15	5	10
	PC26. Produce thermally-cut components which meet specified quality criteria leave the work area in a safe and tidy condition on completion of the cutting activities		5	0	5
	PC27. Recognize and correct burn-back and flashback		10	5	5
	PC28. Detect and correct defects in cut		5	0	5
	PC29. Check that the finished components meet the standard required		15	5	10
	PC30. Use appropriate methods and equipment to check the quality, and that all dimensional and geometrical aspects of the cut material are to the specification		10	0	10
	PC31. Identify various cutting defects		15	5	10
	PC32. Report any difficulties or problems that may arise with the cutting activities, and carry out any agreed actions		10	5	5

	PC33. Detect equipment malfunctions and deal with them appropriately		5	0	5
	PC34. Deal promptly and effectively with problems within their control, and seek help and guidance from the relevant people if they have problems that they cannot resolve		10	5	5
	PC35. Shut down and make safe the cutting equipment on completion of the cutting activities		10	5	5
	PC36. In case of emergencies follow standard emergency procedures		10	5	5
	NOS Total	**Total**	**300**	**85**	**215**
3. ISC/N0008: Use basic health and safety practices at the workplace	PC1. Use protective clothing/equipment for specific tasks and work conditions	**150**	9	4	5
	PC2. State the name and location of people responsible for health and safety in the workplace		6	1	5
	PC3. State the names and location of documents that refer to health and safety in the workplace		2	1	1
	PC4. Identify job-site hazardous work and state possible causes of risk or accident in the workplace		8	4	4
	PC5. Carry out safe working practices while dealing with hazards to ensure the safety of self and others state methods of accident prevention in the work environment of the job role		6	1	5
	PC6. State location of general health and safety equipment in the workplace		6	1	5
	PC7. Inspect for faults, set up and safely use steps and ladders in general use		6	1	5
	PC8. Work safely in and around trenches, elevated places and confined areas		6	1	5
	PC9. Lift heavy objects safely using correct procedures		6	1	5

	PC10. Apply good housekeeping practices at all times		2	1	1
	PC11. Identify common hazard signs displayed in various areas		6	5	1
	PC12. Retrieve and/or point out documents that refer to health and safety in the workplace		5	1	4
	PC13. Use the various appropriate fire extinguishers on different types of fires correctly		9	4	5
	PC14. Demonstrate rescue techniques applied during fire hazard		8	4	4
	PC15. Demonstrate good housekeeping in order to prevent fire hazards		2	1	1
	PC16. Demonstrate the correct use of a fire extinguisher		6	1	5
	PC17. Demonstrate how to free a person from electrocution		6	1	5
	PC18. Administer appropriate first aid to victims as required e.g. in case of bleeding, burns, choking, electric shock, poisoning etc.		8	3	5
	PC19. Demonstrate basic techniques of bandaging		6	1	5
	PC20. Respond promptly and appropriately to an accident situation or medical emergency in real or simulated environments		7	2	5
	PC21. Perform and organize loss minimization or rescue activity during an accident in real or simulated environments		6	1	5
	PC22. Administer first aid to victims in case of a heart attack or cardiac arrest due to electric shock, before the arrival of emergency services in real or simulated cases		6	1	5
	PC23. Demonstrate the artificial respiration and the CPR Process		6	1	5

	PC24. Participate in emergency procedures		6	1	5
	PC25. Complete a written accident/ incident report or dictate a report to another person, and send report to person responsible		4	1	3
	PC26. Demonstrate correct method to move injured people and others during an emergency		2	1	1
	NOS Total	**Total**	**150**	**45**	**105**
4. ISC/N0009: Work effectively with others	PC1. Accurately receive information and instructions from the supervisor and fellow workers, getting clarification where required	**100**	10	5	5
	PC2. Accurately pass on information to authorized persons who require it and within agreed timescale and confirm its receipt		9	4	5
	PC3. Provide information to others clearly, at a pace and in a manner that helps them to understand		11	1	10
	PC4. Display helpful behaviour by assisting others in performing tasks in a positive manner, where required and possible		10	5	5
	PC5. Consult with and assist others to maximize effectiveness and efficiency in carrying out tasks		10	5	5
	PC6. Display appropriate communication etiquette while working		11	1	10
	PC7. Display active listening skills while interacting with others at work		11	1	10
	PC8. Use appropriate tone, pitch and language to convey politeness, assertiveness, care and professionalism		8	3	5
	PC9. Demonstrate responsible and disciplined behaviours at the workplace		14	4	10
	PC10. Escalate grievances and problems to supervisor		6	1	5
	NOS Total	**Total**	**100**	**30**	**70**

Do

- Explain each Guideline for Assessment in detail
- Explain the score that each trainee needs to obtain
- Recapitulate each NOS one-by-one and take participants through the allocation of marks for Theory and Skills Practical.
- Explain the Allocation of Marks. Explain that they will be assessed on Theory and Skills Practical.
- Explain that for the first NOS, 143 marks are allotted for Theory and & 307 for Skills Practical.

Notes

Skill India
कौशल भारत - कुशल भारत

सत्यमेव जयते
GOVERNMENT OF INDIA
MINISTRY OF SKILL DEVELOPMENT
& ENTREPRENEURSHIP

N·S·D·C
National
Skill Development
Corporation
Transforming the skill landscape

Address: Royal Exchange, 6 N.S. Road, Kolkata - 700 001
Email: info.iisssc@gmail.com
Web: www.iisssc.org
Phone: +91 9831083024
CIN No.: U74900WB2013NPL197827

Price: ₹

978-1-111-22222-45-7